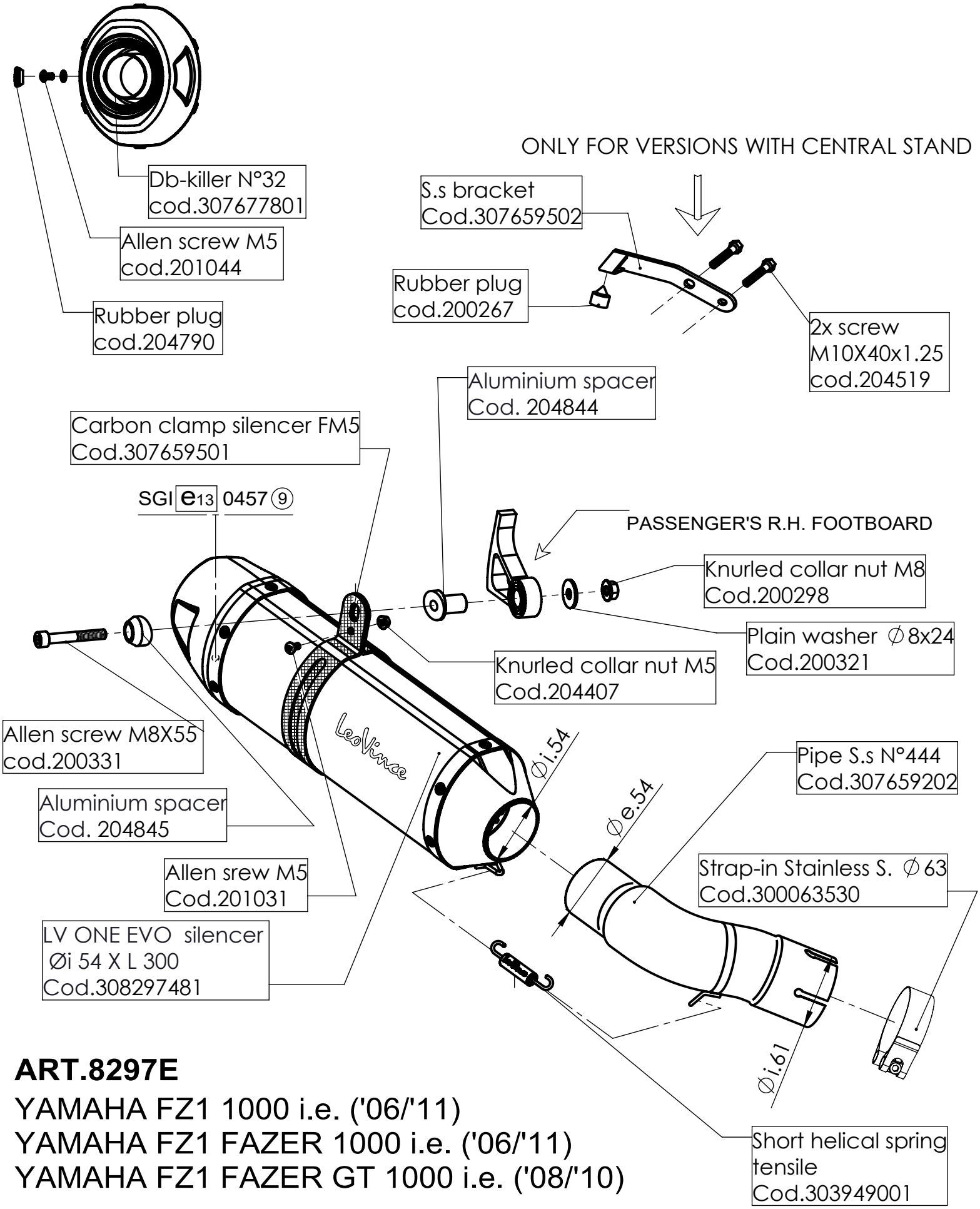

ART.8297E

YAMAHA FZ1 1000 i.e. ('06/'11)
YAMAHA FZ1 FAZER 1000 i.e. ('06/'11)
YAMAHA FZ1 FAZER GT 1000 i.e. ('08/'10)

LV ONE EVO - SLIP ON - STAINLESS STEEL - APPROVED