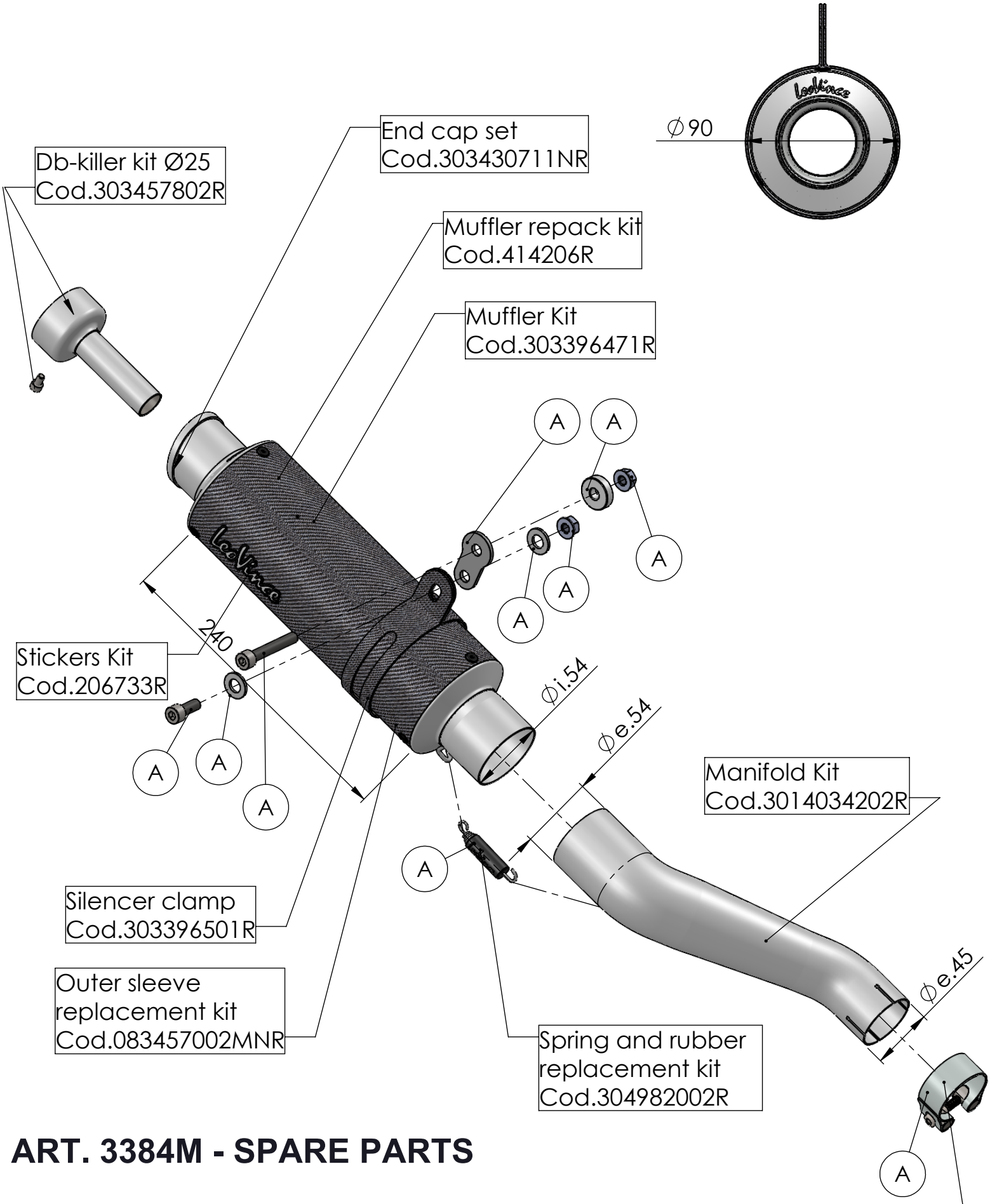


# ART. 3384M - SPARE PARTS

HONDA CB 500 F - CBR 500 R
(do not fits with original centre stand)

Ⓐ FITTING KIT COD. 303384601R