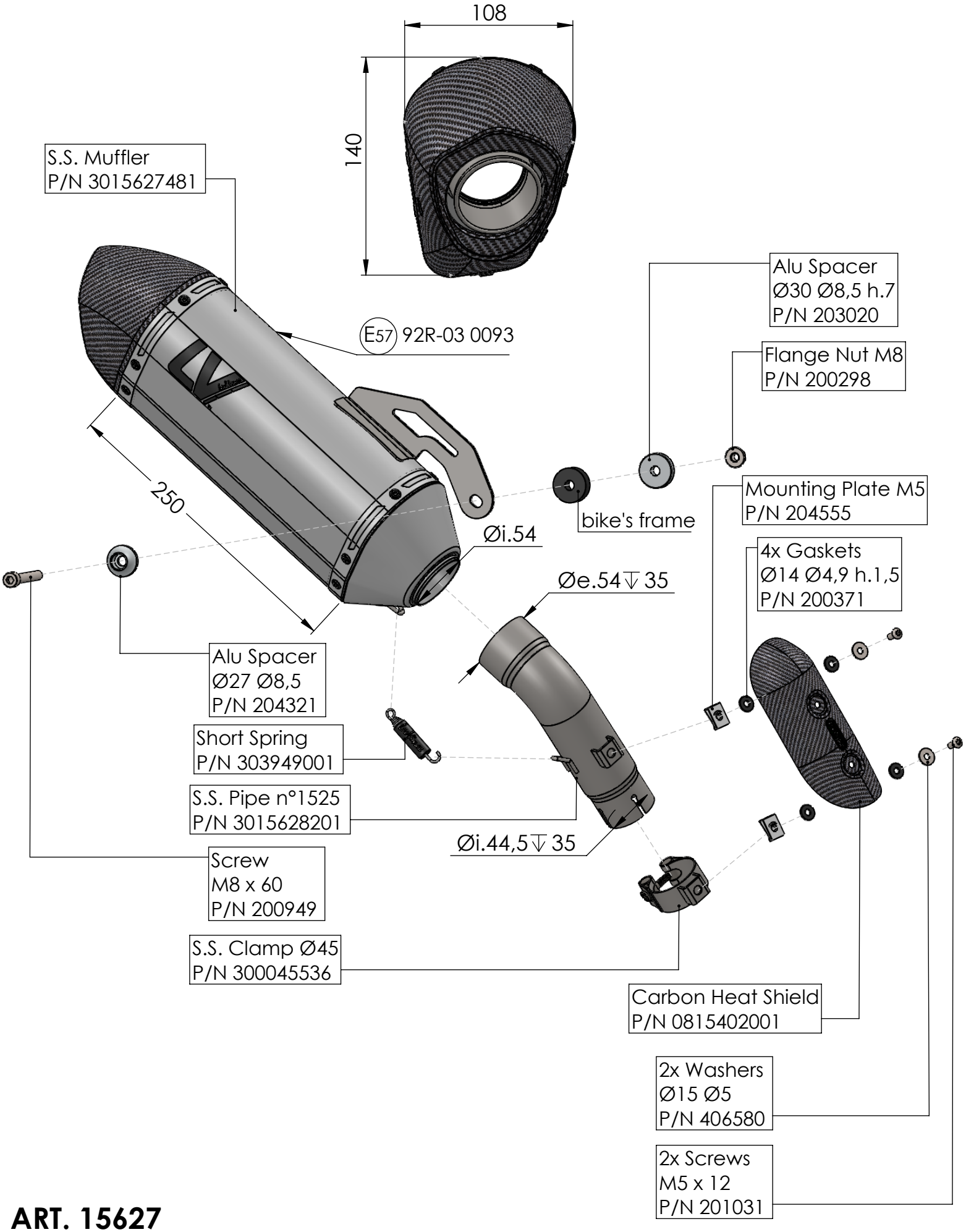

ART. 15627

TRIUMPH TIGER 800 SPORT

SLIP-ON LV-14 STAINLESS STEEL APPROVED