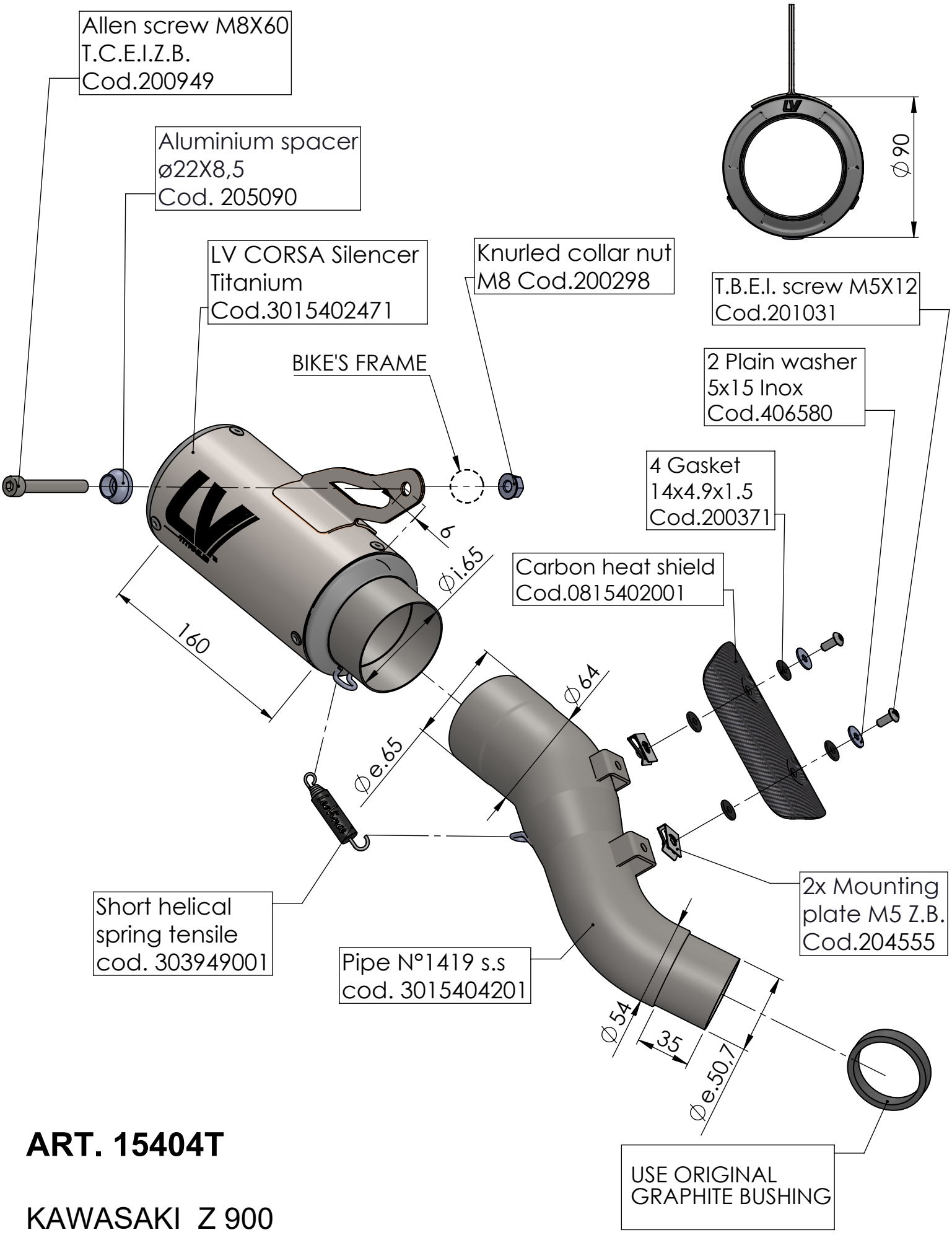

ART. 15404T

KAWASAKI Z 900

SLIP-ON - LV CORSA - TITANIUM