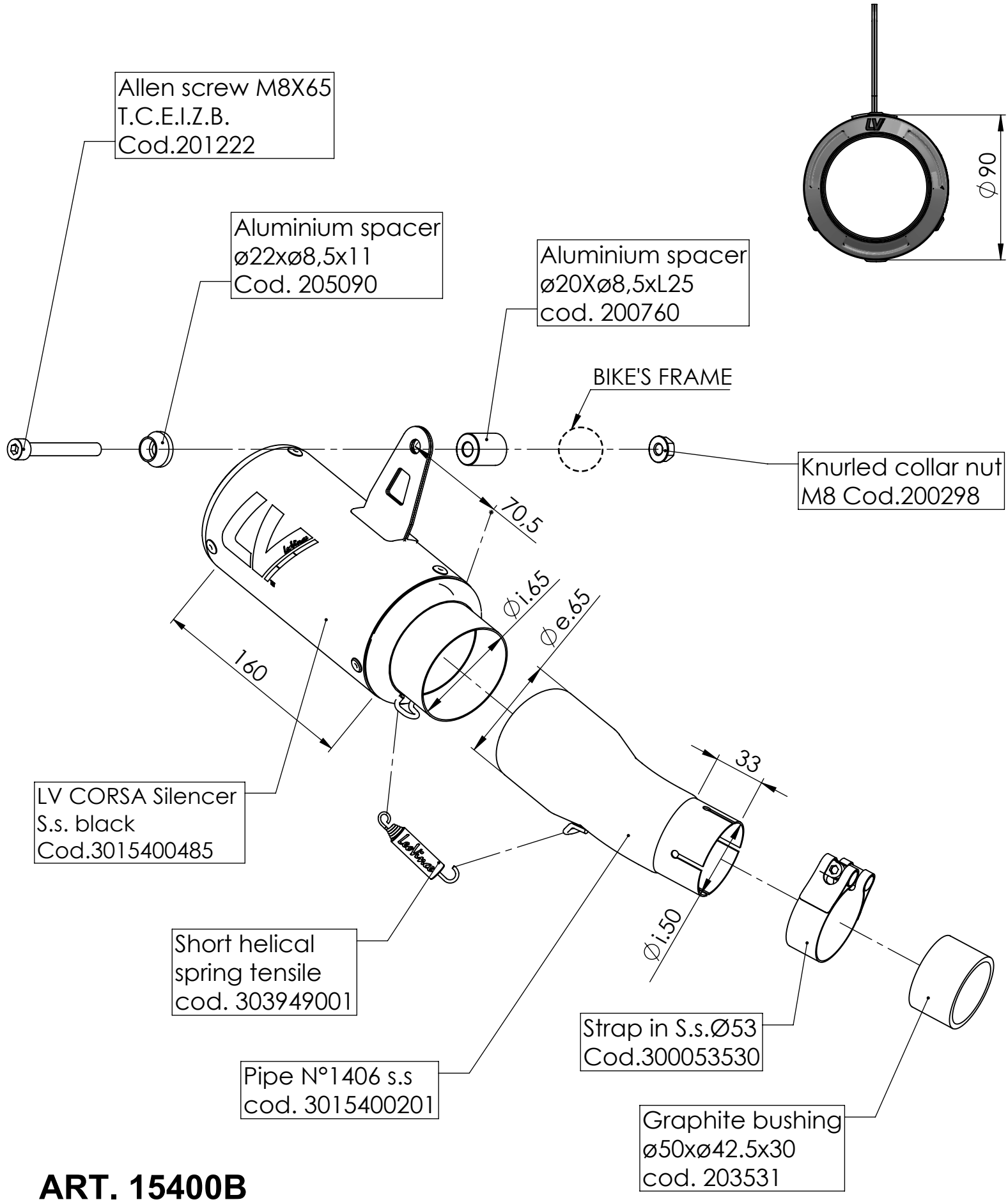

ART. 15400B

KAWASAKI Z 400 / NINJA 400

SLIP-ON - LV CORSA - BLACK