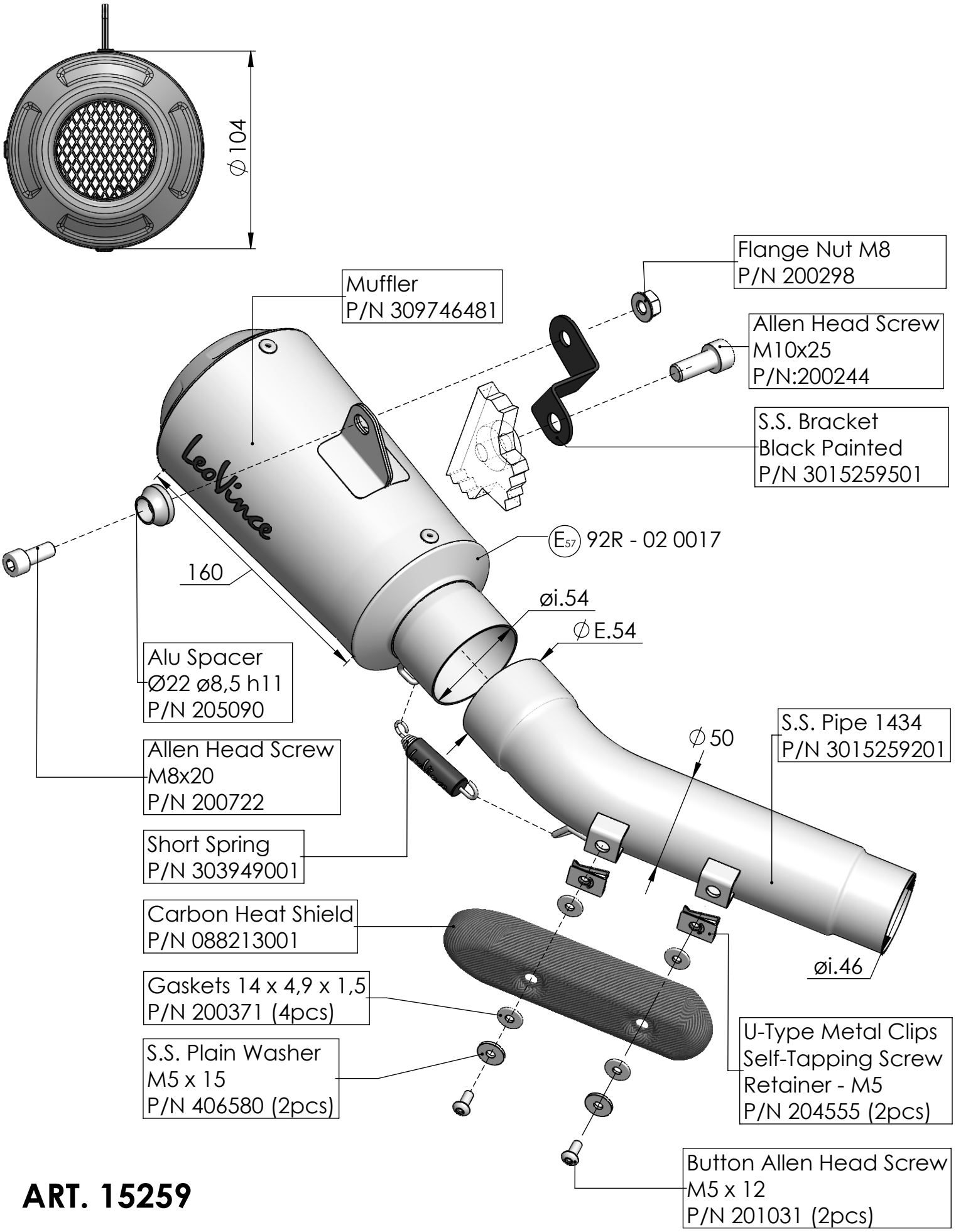

ART. 15259

BENELLI - 752S

SLIP-ON - LV10 - STAINLESS STEEL - APPROVED