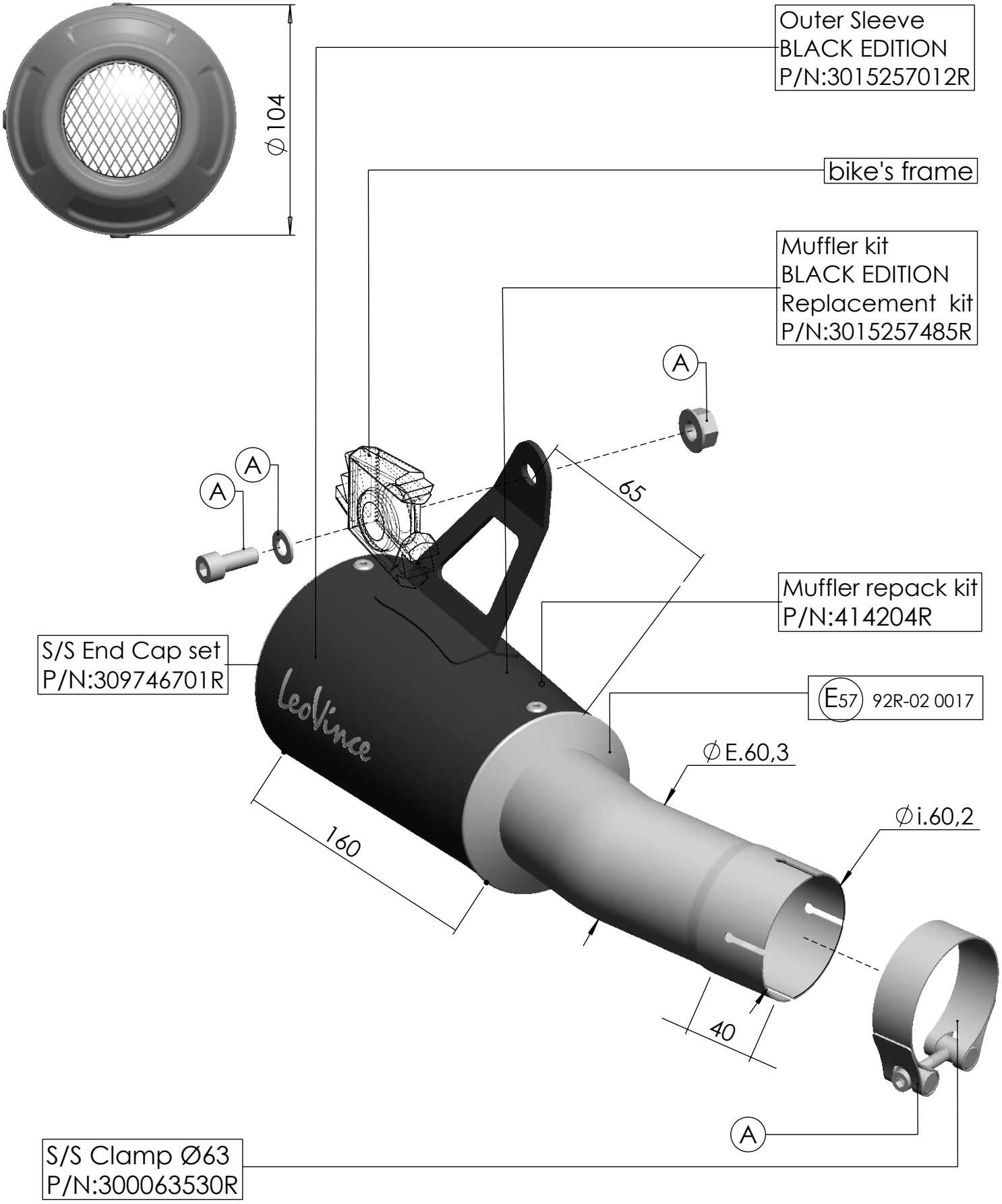

ART.15257B - SPARE PARTS

(A) Fitting Kit
P/N: 3015257601R

BMW S1000 XR (Fits with original panniers)

SLIP-ON LV-10 BLACK EDITION - APPROVED