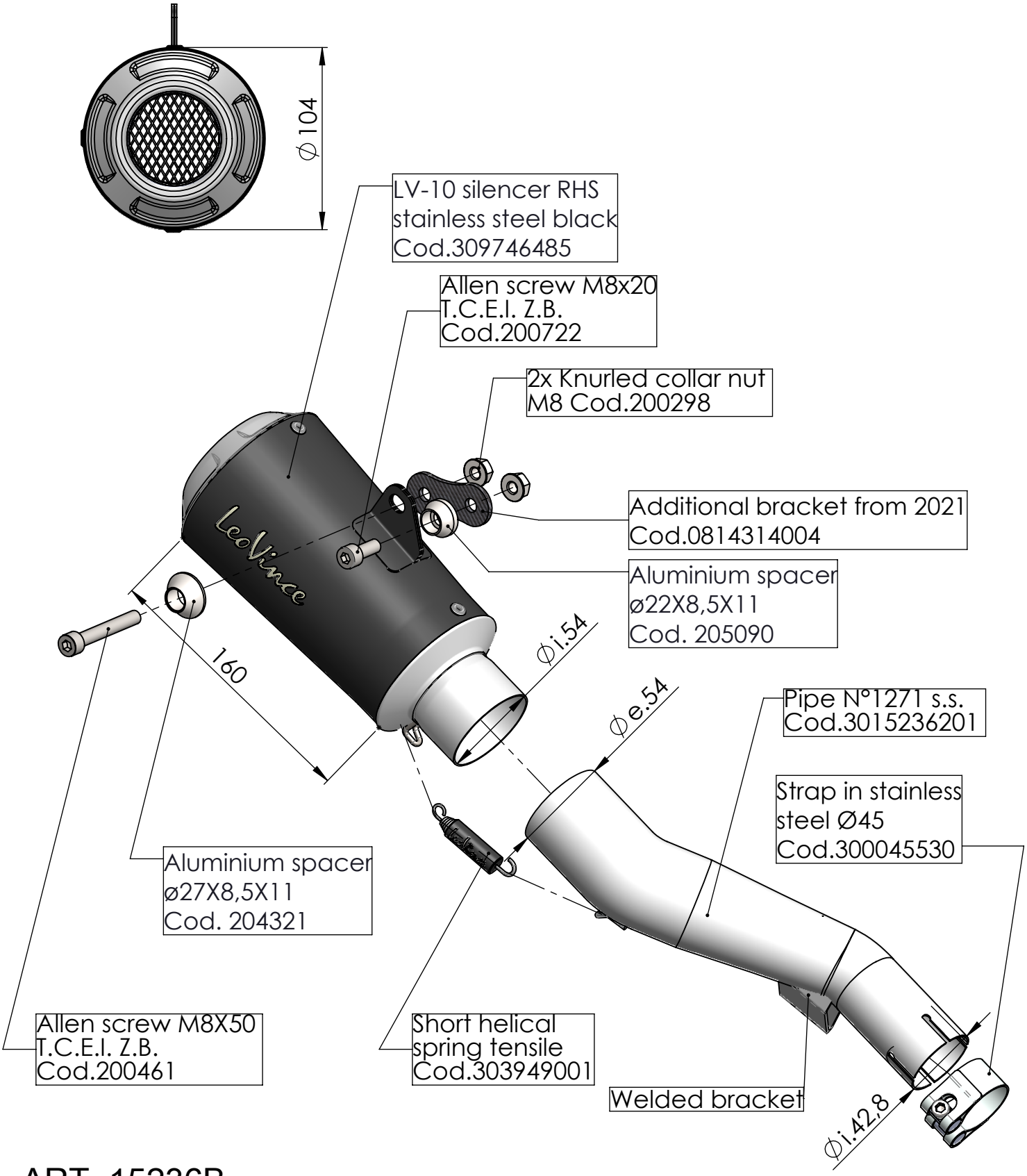


ART. 15236B

HONDA CB 500F / CBR 500R / CB 500X
(fits with original centre stand)

SLIP-ON - LV-10 - BLACK EDITION