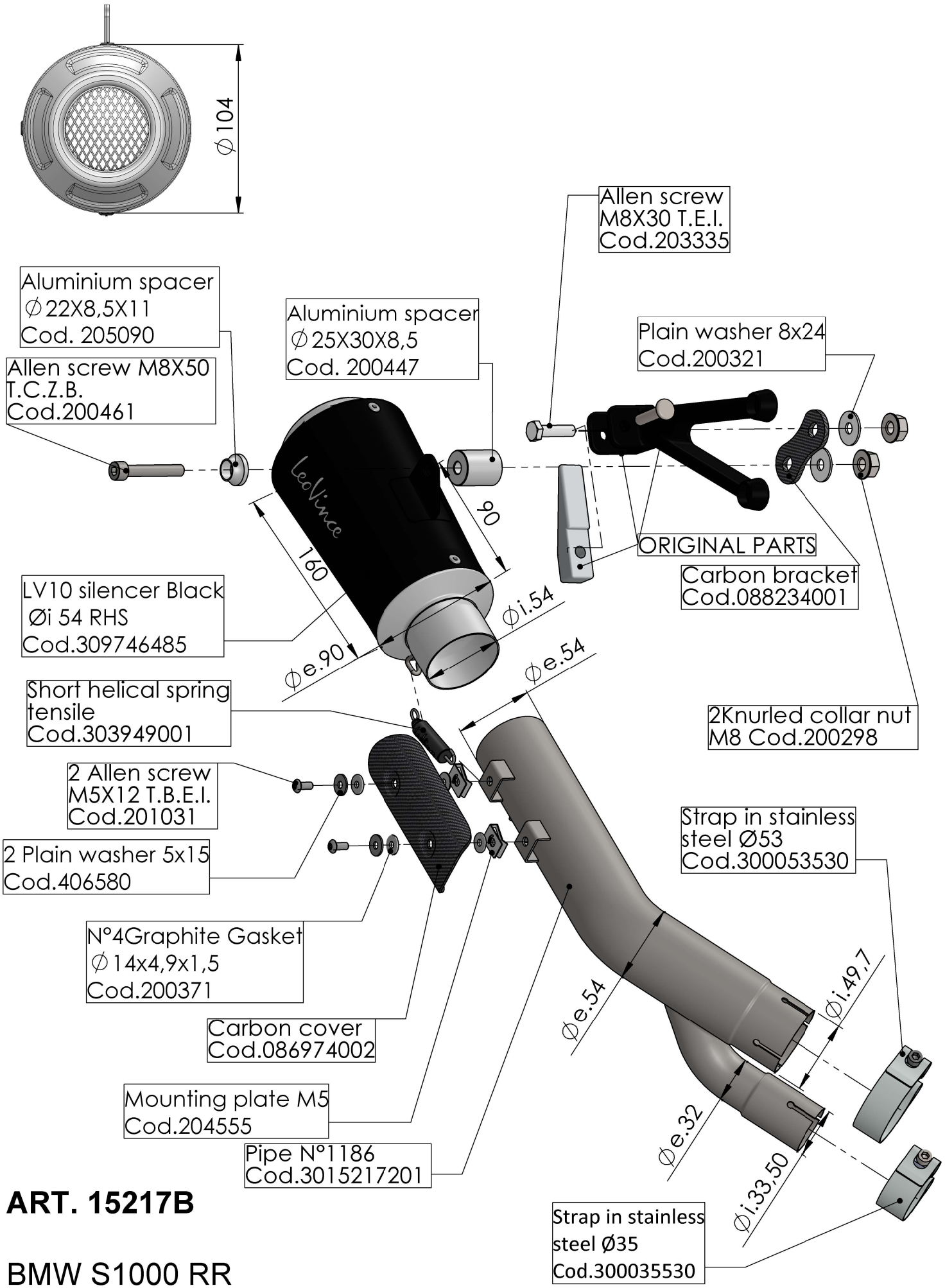

ART. 15217B

BMW S1000 RR

SLIP-ON - LV-10 - BLACK