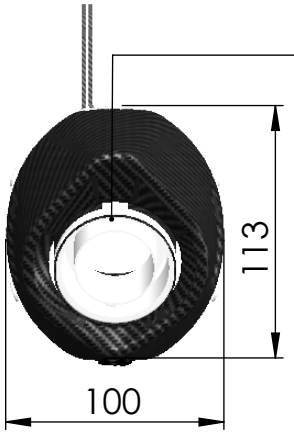

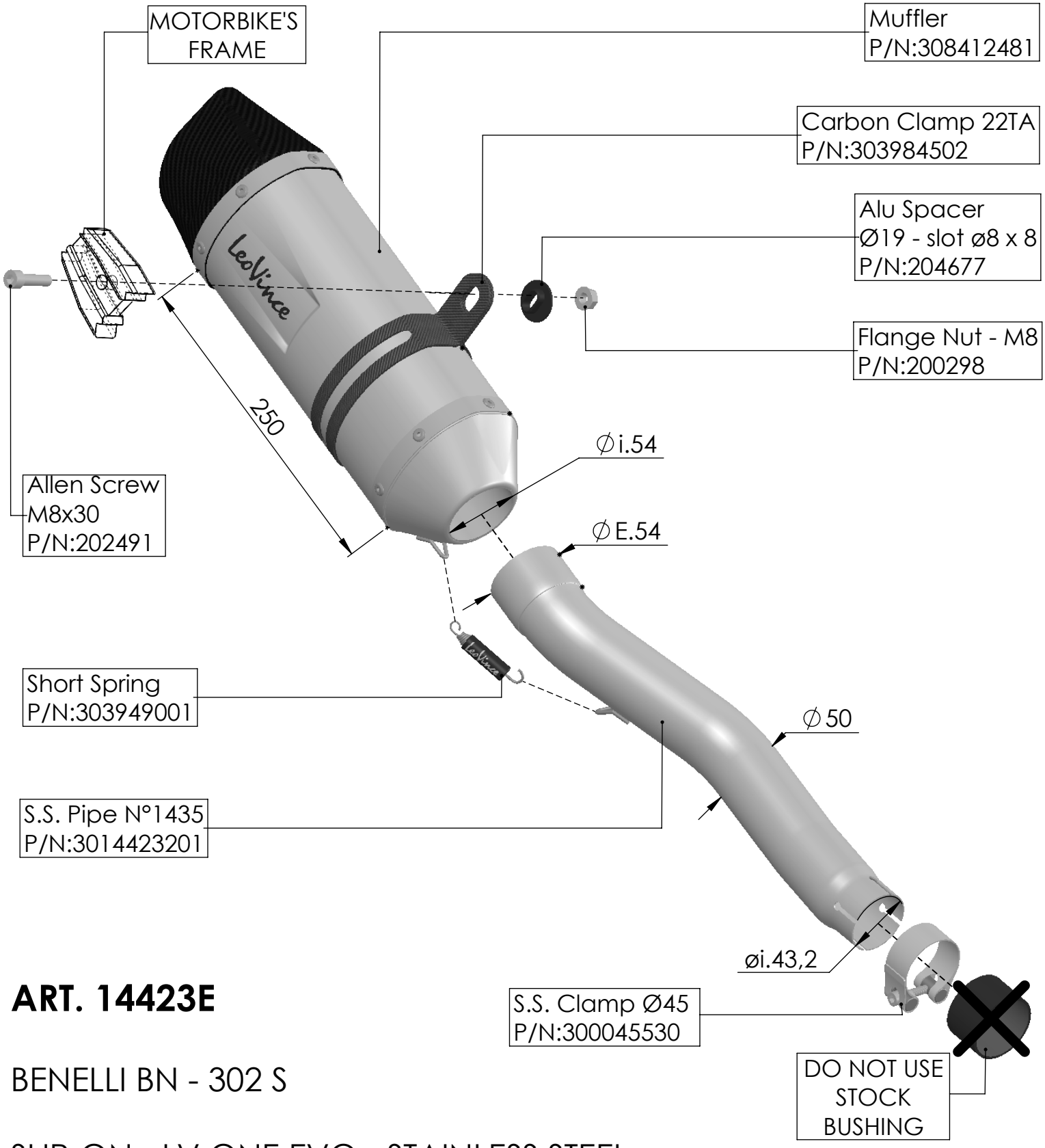

ART. 14423E

BENELLI BN - 302 S

SLIP-ON - LV ONE EVO - STAINLESS STEEL