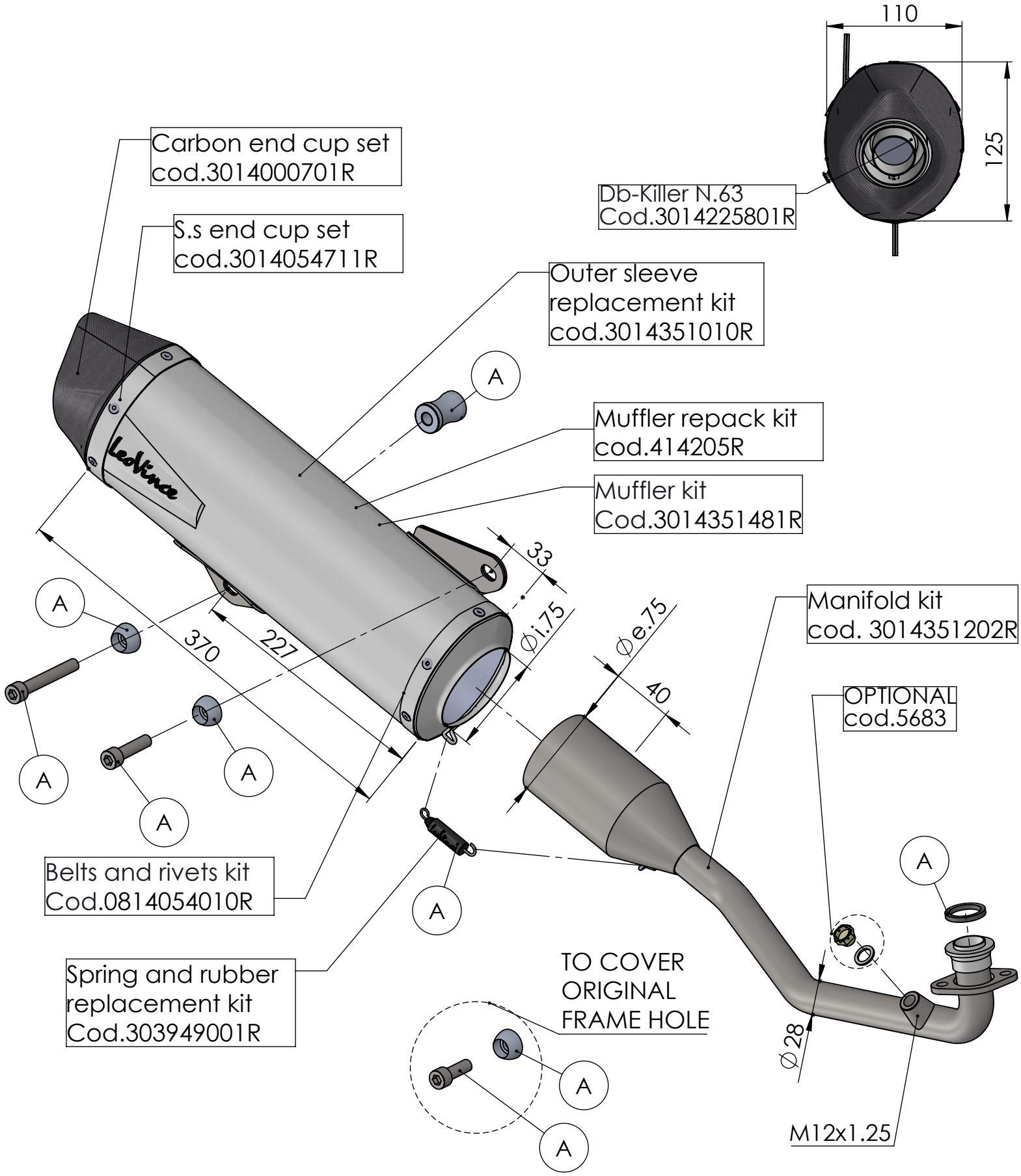

ART. 14351E - SPARE PARTS

HONDA SH 125i / 150i

Ⓐ FITTING KIT cod.3014351601R