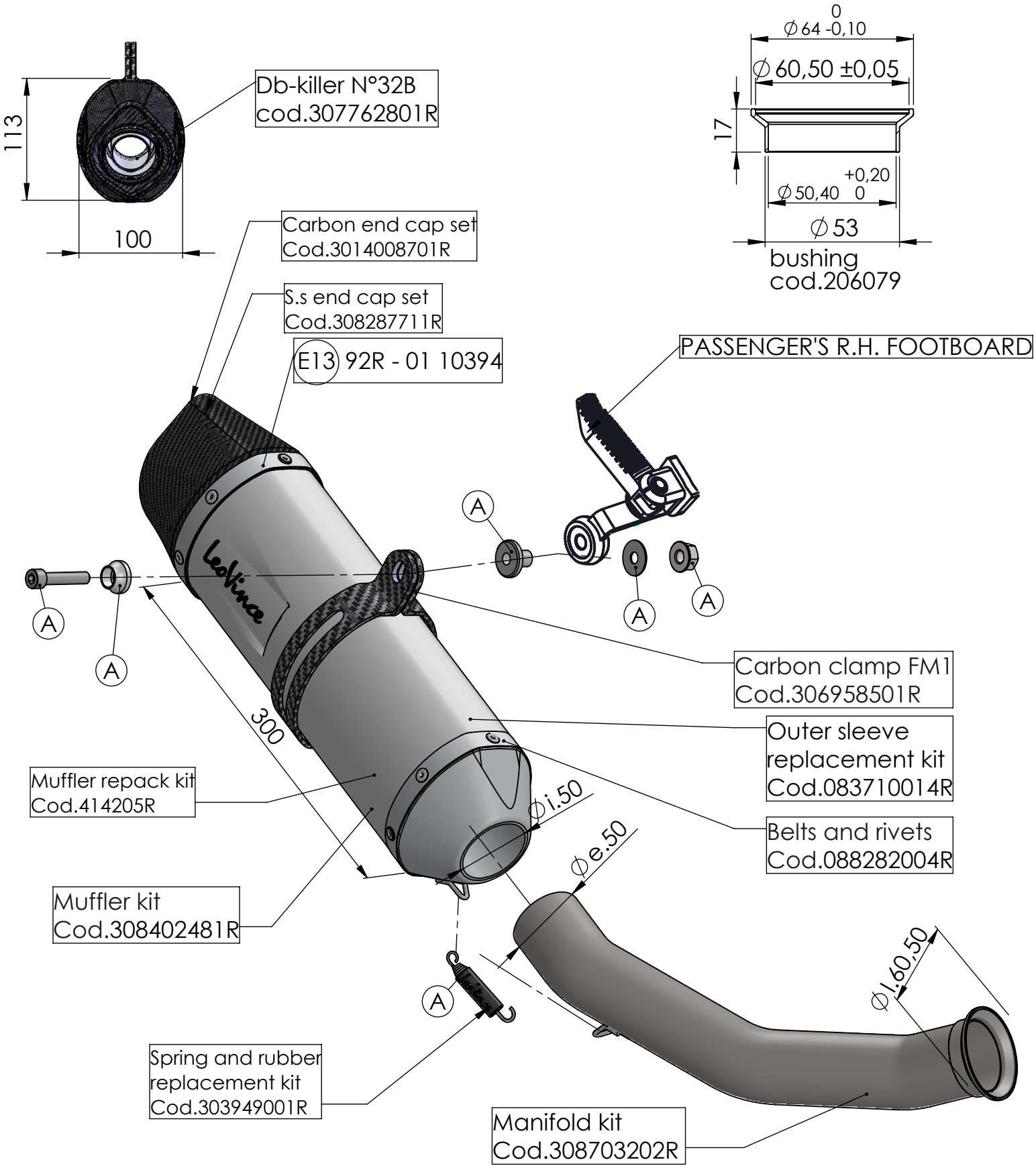

ART. 14302E SPARE PARTS

KTM DUKE 690/R
(also fits 32kW version)

Ⓐ FITTING KIT Cod.308703601R