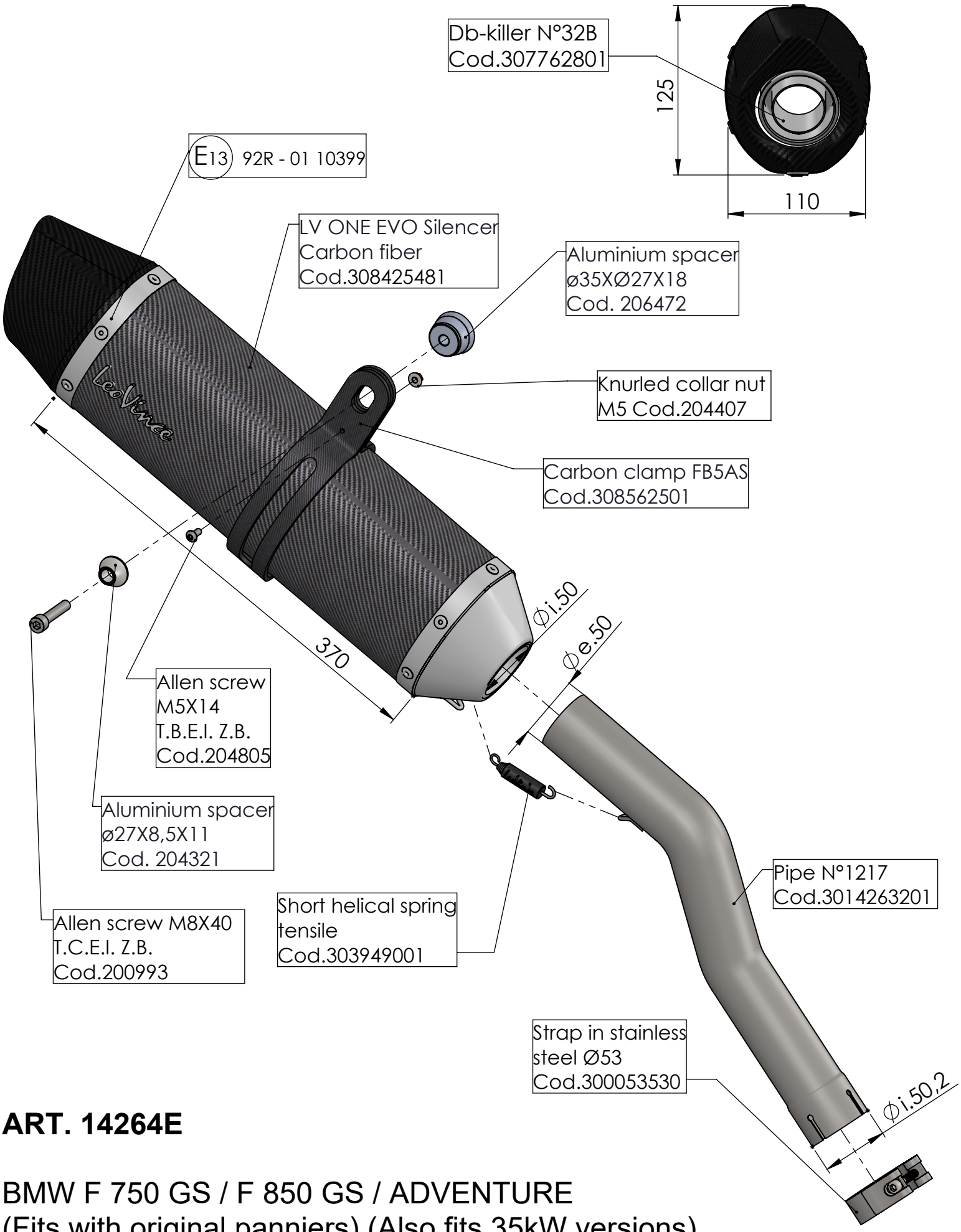

ART. 14264E

BMW F 750 GS / F 850 GS / ADVENTURE
(Fits with original panniers) (Also fits 35kW versions)

SLIP-ON - LV ONE EVO - CARBON - APPROVED