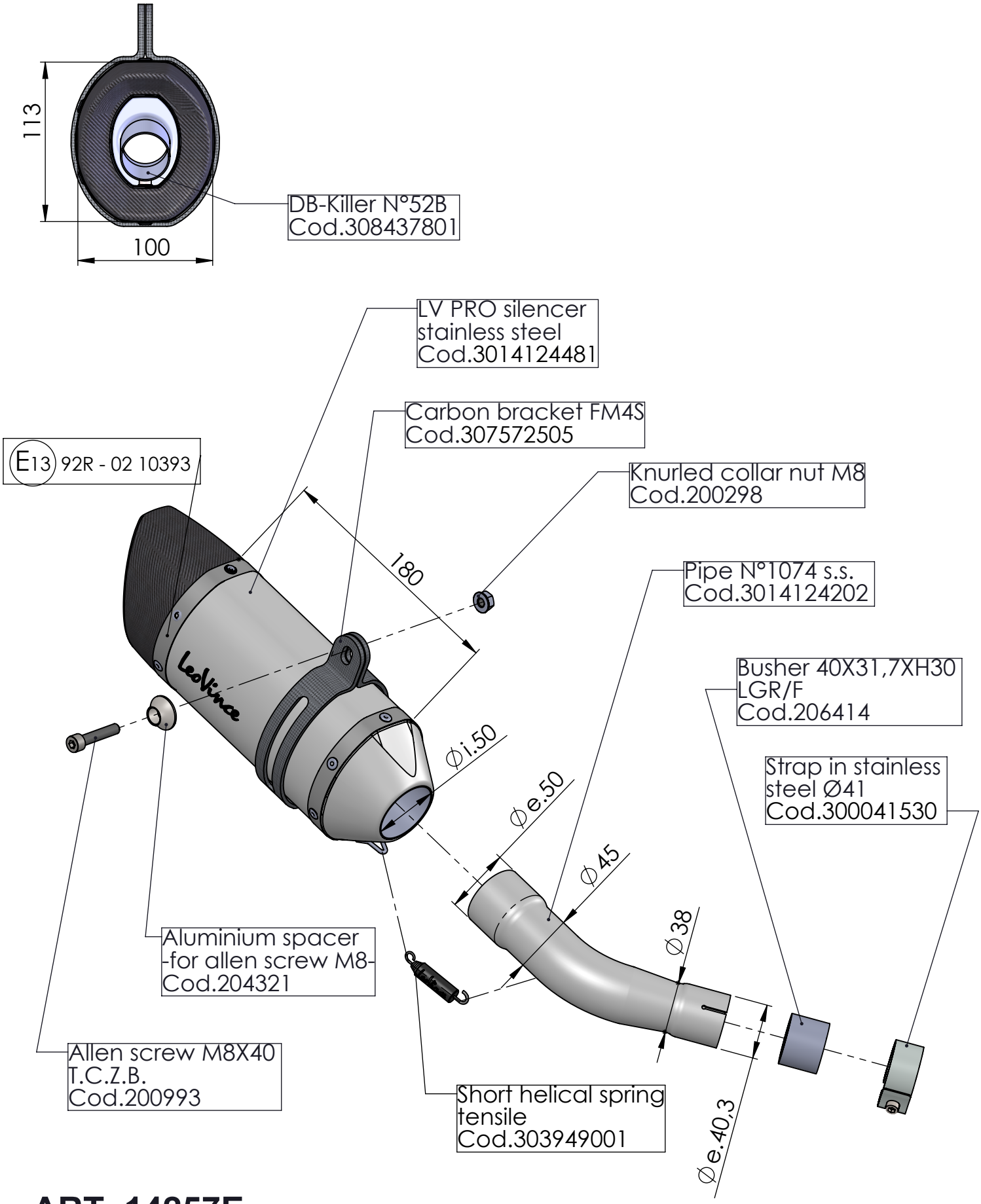

ART. 14257E

YAMAHA YZF-R3 - MT-03

SLIP-ON - LV PRO - STAINLESS S.- APPROVED