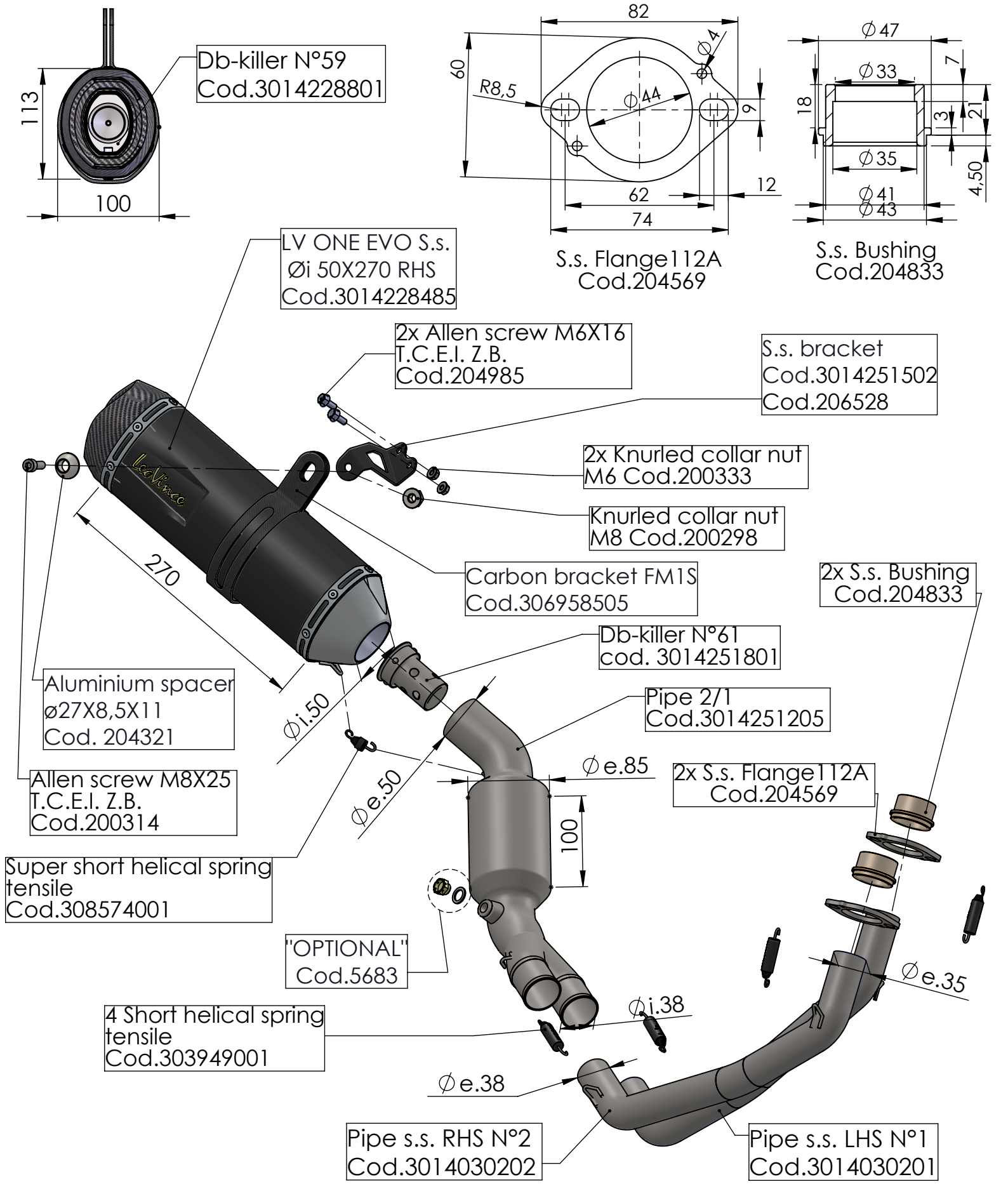

ART. 14251EB

YAMAHA MT-07 / MT-07 TRACER / XSR 700 (also fit 35Kw versions)

FULL SYSTEM 2/1 - LV ONE EVO - BLACK