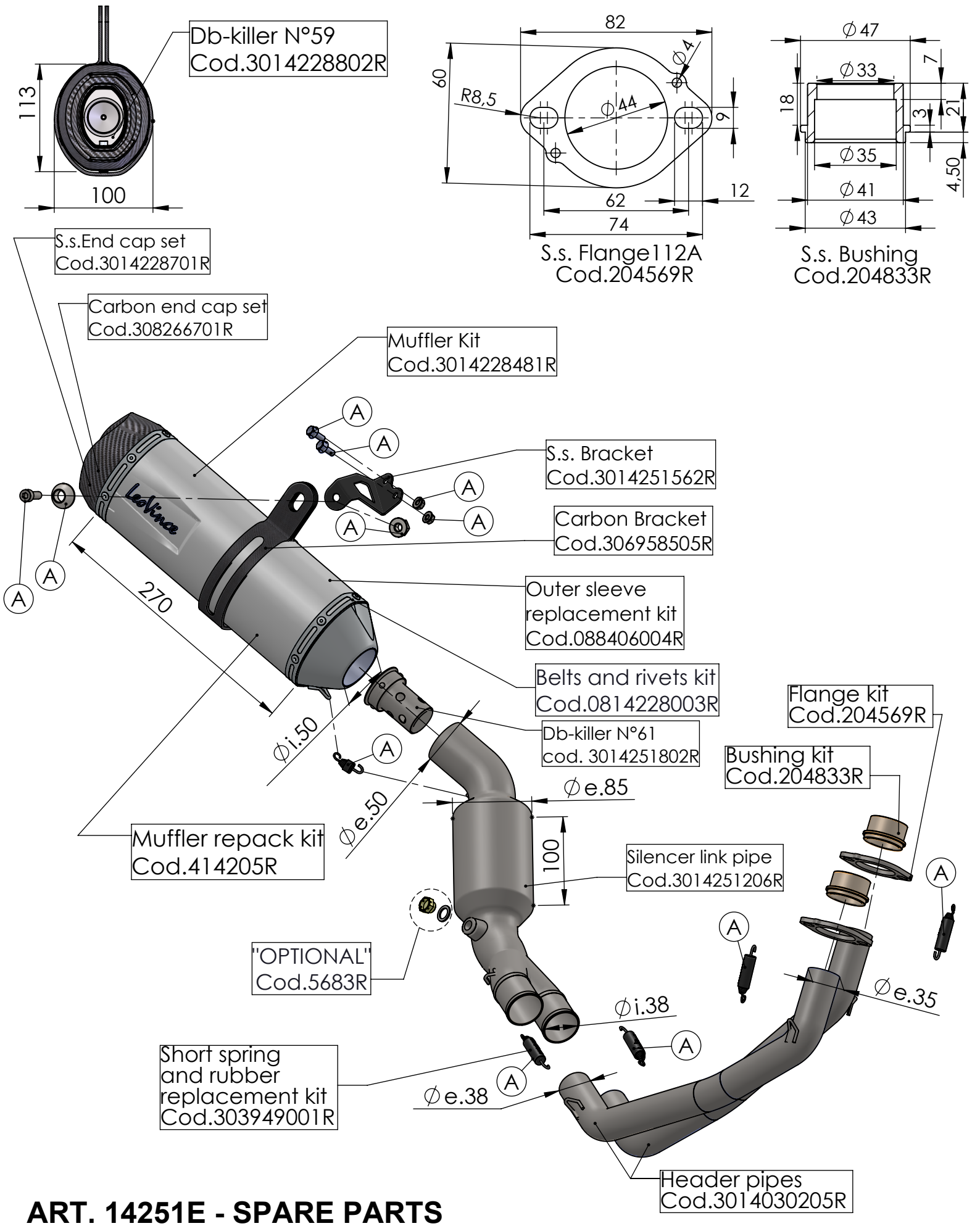

ART. 14251E - SPARE PARTS

YAMAHA MT-07 / MT-07 TRACER / XSR 700 (also fit 35Kw versions)

Ⓐ FITTING KIT Cod. 3014251601R