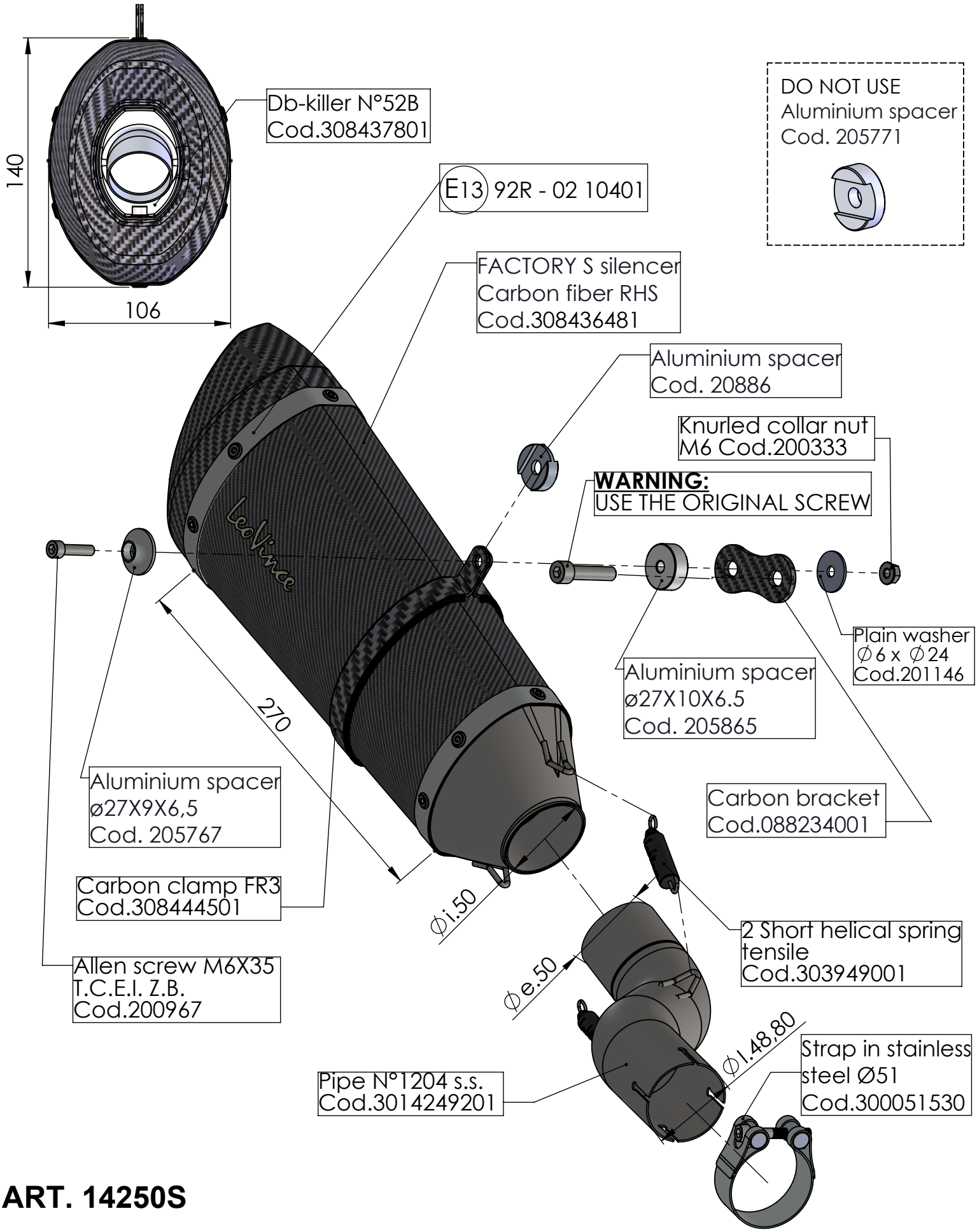

ART. 14250S

HONDA CB 1000 R Neo Sports Café

SLIP-ON - FACTORY S - CARBON - APPROVED