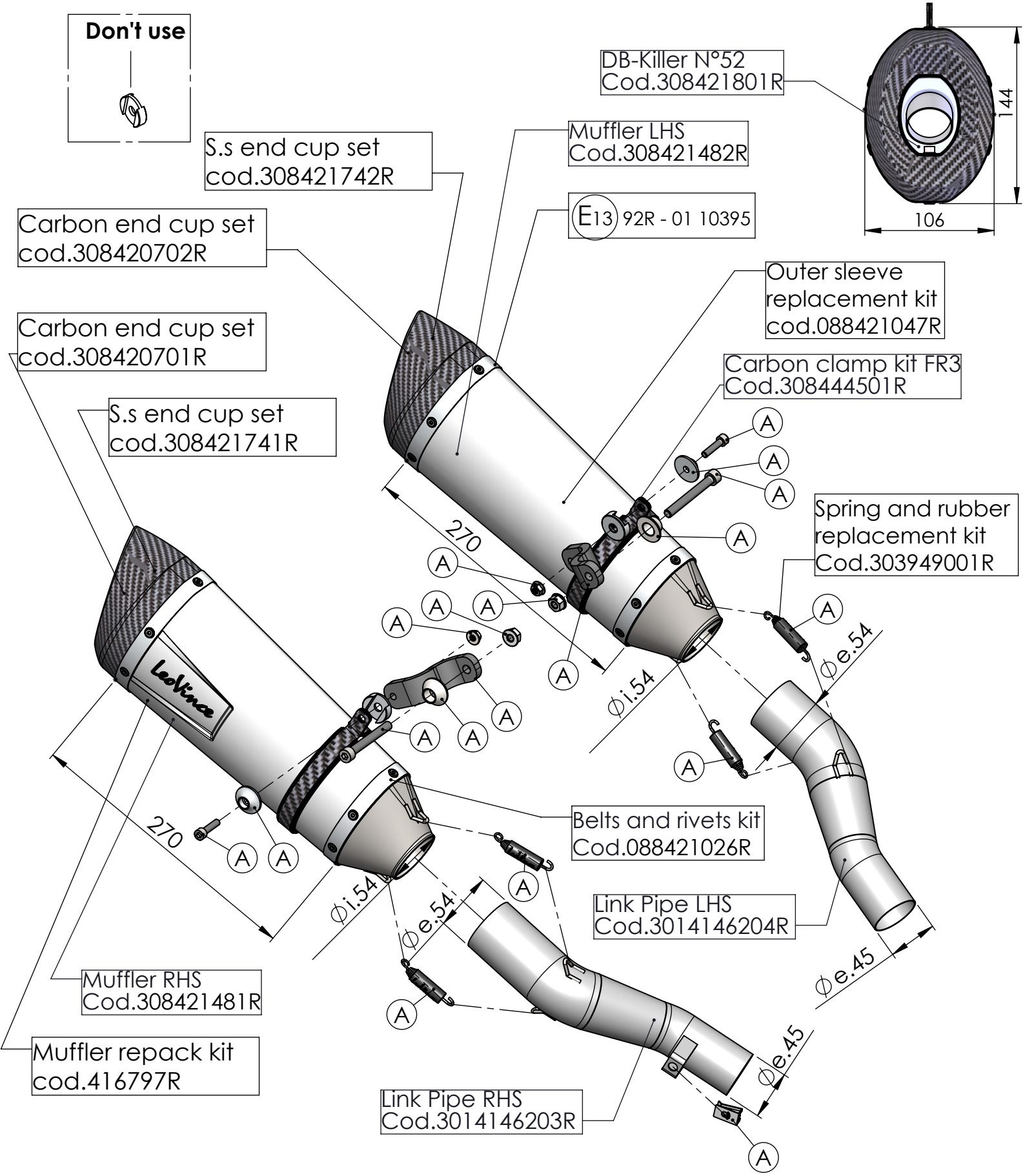

ART. 14223S - SPARE PARTS

KAWASAKI Z1000/Z1000SX/NINJA1000/ABS (US only)
(Fits with original panniers)

Ⓐ FITTING KIT cod.3014146601R