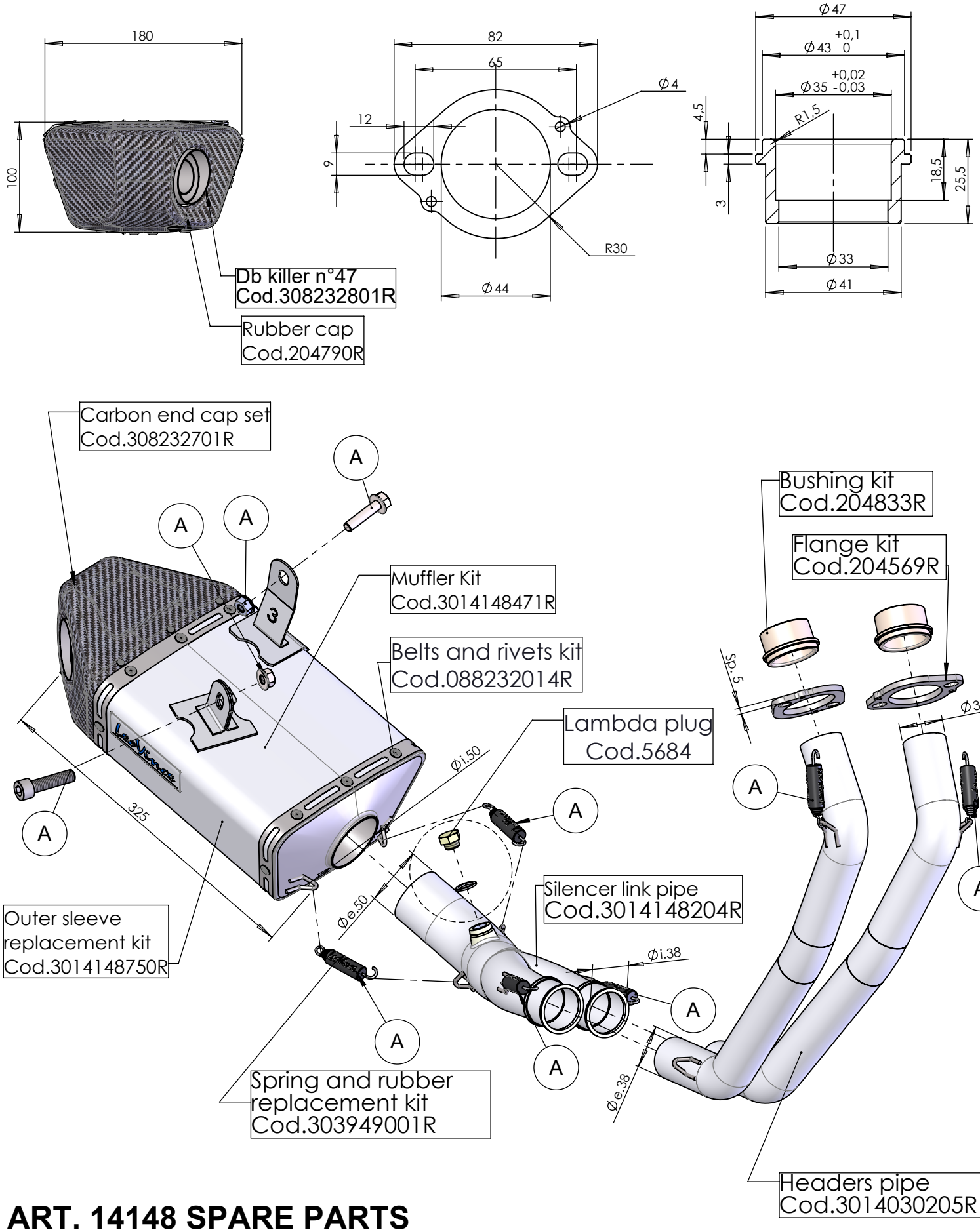

ART. 14148 SPARE PARTS

YAMAHA MT-07 / MT-07 TRACER / XSR 700

Ⓐ FITTING KIT Cod. 3014148601R