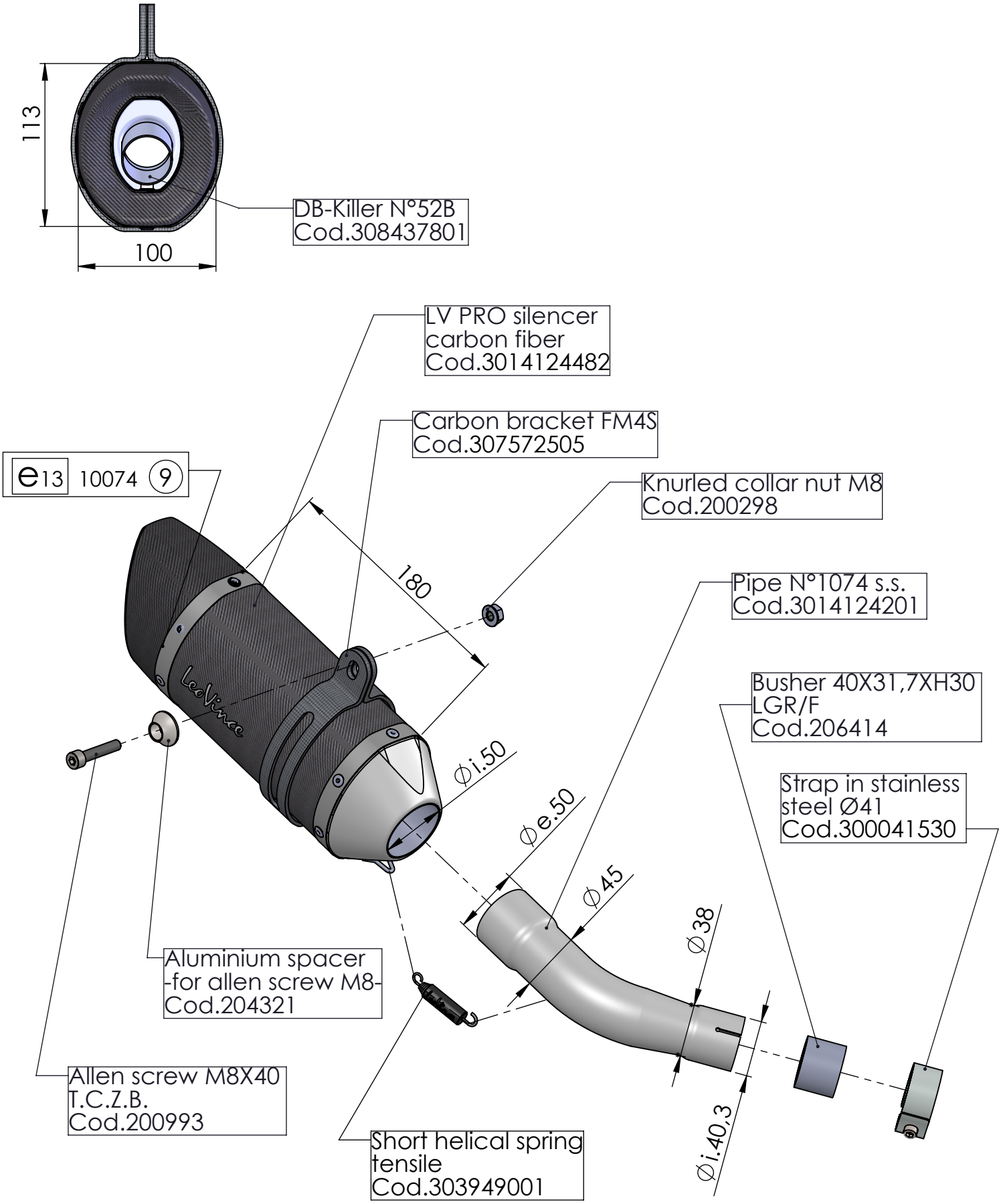


# ART. 14125E

YAMAHA MT25 - MT03 - R25 - R3

SLIP-ON - LV PRO - CARBON - APPROVED