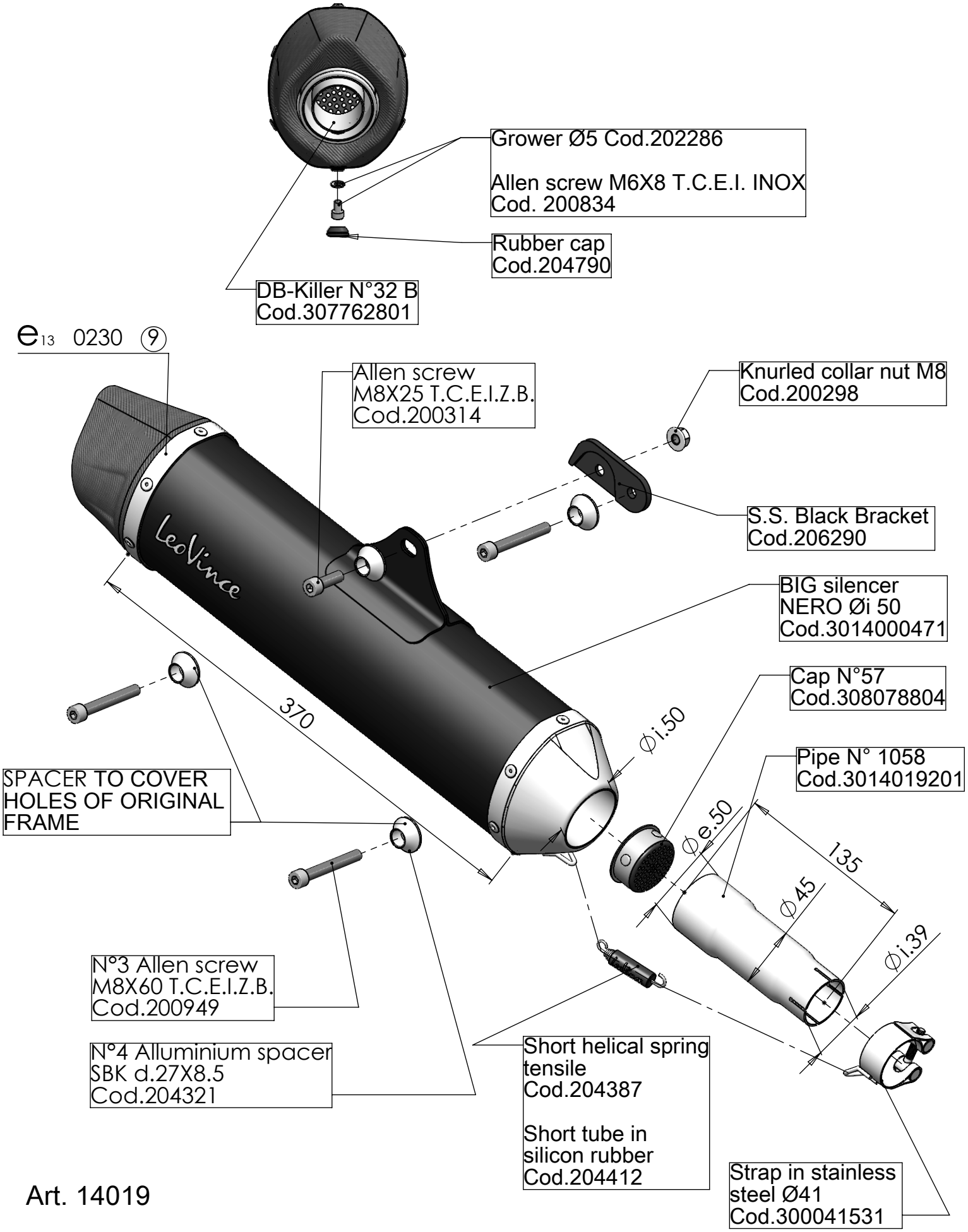


Art. 14019

PEUGEOT METROPOLIS 400 ('13 / '15)

Slip-on "NERO" - Passaggio STANDARD
OMOLOGATO "EVOLUTION II"