Item number: **ALK.00.732.10200/B**	Revision: **01** · Date: **08 - 2026**

TRAX ADV top case passenger backrest

~ 1 h.	EASY DIFFICULT

ENGLISH ·Thank you for choosing this premium product from SW-MOTECH. Visit our online shop for more information (e.g. model assignments). Required documents (e.g. national type approval) are available there for you to download.
Please read and understand all the instructions, safety information and warnings in these mounting instructions before mounting and using the product in order to avoid injury and damage. Keep these mounting instructions for reference.
This product was developed for vehicles in factory condition. Compatibility with original accessories or accessories from other manufacturers cannot be guaranteed.
These mounting instructions have been prepared to the best of our current knowledge. No legal claims relating to accuracy can be made. Errors and omissions excepted. We reserve the right to make technical and design changes. The copyright is held by SW-MOTECH.

SAFETY WARNING SYMBOL

⚠ **This warning symbol is used in these mounting instructions to warn of deadly dangers, injuries or other hazards. The words DANGER, WARNING or CAUTION are used as part of this warning symbol to convey important safety messages and information relating to the installation and use of this product. These words, together with the safety warning symbol, mean:**

⚠ **DANGER:** Indicates a hazardous situation which, if not avoided, will result in death or serious injury!

⚠ **WARNING:** Indicates a hazardous situation which, if not avoided, may result in death or serious injury!

⚠ **CAUTION:** Indicates a hazardous situation which, if not avoided, may result in minor or moderate injury!

⚠ ***NOTE:*** Important information, but not relating to a risk of death or injury (property damage only)!

GENERAL INFORMATION

⚠ **WARNING: Assembly and/or maintenance of this product requires advanced technical skill, appropriate tools, and a good understanding of tool usage and torque specifications. For your own safety, SW-MOTECH recommends having the assembly and/or maintenance carried out by a qualified and certified motorcycle workshop.**

⚠ **WARNING: If you do choose to assemble this product yourself, carefully and fully read the mounting instructions before assembly and use, and follow all instructions to avoid serious injury or death. Also observe all relevant information in the vehicle manual when mounting or using the product. IF YOU DO NOT UNDERSTAND ANY PART OF THESE MOUNTING INSTRUCTIONS OR NEED AN EXPLANATION AS TO A SPECIFIC INSTRUCTION, DO NOT ATTEMPT TO INSTALL THIS PRODUCT WITHOUT CONSULTING SW-MOTECH FOR ASSISTANCE!**

PREPARATION: Read the mounting instructions carefully and make sure that all parts on the parts list are available.

⚠ **CAUTION: Ensure that your vehicle is standing securely. Switch off the engine and remove the ignition key. Allow the engine/exhaust to cool down if necessary. Disconnect the battery when working on the electrical system. Only use proper tools and always wear safety goggles and gloves during assembly and maintenance. Have a second person help you with assembly and maintenance.**

ASSEMBLY: All parts and connections removed from the vehicle must be reinstalled according to the vehicle manufacturer's specifications or replaced with parts and hardware supplied by SW-MOTECH.

⚠ **WARNING: Secure all threads with a medium-strength liquid threadlocker, unless otherwise specified.**

⚠ **DANGER: Tightening torques not defined by SW-MOTECH must be obtained from the vehicle manufacturer or a certified motorbike workshop.**

FUNCTIONAL CHECK: After mounting the product, ensure that no moving parts are obstructed and that the function of the vehicle is not impeded. Cables and hoses must not rub against each other and/or be hindered in any way.

⚠ **WARNING: Carry out a comprehensive functionality check before you start to drive. Check the tightening torque of all connections and the tight fit of the product after the first 50 km and then at regular intervals. Mounted accessories can change the handling and stability of the vehicle.**

SW-MOTECH GmbH & Co. KG
Ernteweg 7-10
35282 Rauschenberg
Germany

info@sw-motech.com
www.sw-motech.com

The content translation is automated.
© SW-MOTECH GmbH & Co. KG

Errors and omissions excepted
Subject to technical and design changes.

Take note of the symbols and what they mean in the ASSEMBLY section. If the term OEM appears in the ASSEMBLY section, the vehicle manufacturer's specifications must be observed and applied.

If you have any questions, please don't hesitate to contact our Customer Service team or our distributors. You can find our telephone number and a list of our distributors in our online shop:
www.sw-motech.com

Use thread locker: Indicates that a thread must be coated with liquid thread locker. H (HIGH): high strength; M (MEDIUM): medium strength; L (LOW): low strength.

Tighten/note the tightening torque information: Indicates the tightening torque of a part specified by SW-MOTECH or the vehicle manufacturer (OEM).

The content translation is automated.
© SW-MOTECH GmbH & Co. KG

Errors and omissions excepted
Subject to technical and design changes.

5

1	2	3
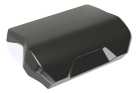		
ALK.00.732.900.01.02	ALK.00.732.900.02.02	M6 x 10; ISO 7380 SC.ST.06.010.02.7380.109
1/1	**1**/1	**5**/5

The content translation is automated.
© SW-MOTECH GmbH & Co. KG

Errors and omissions excepted
Subject to technical and design changes.

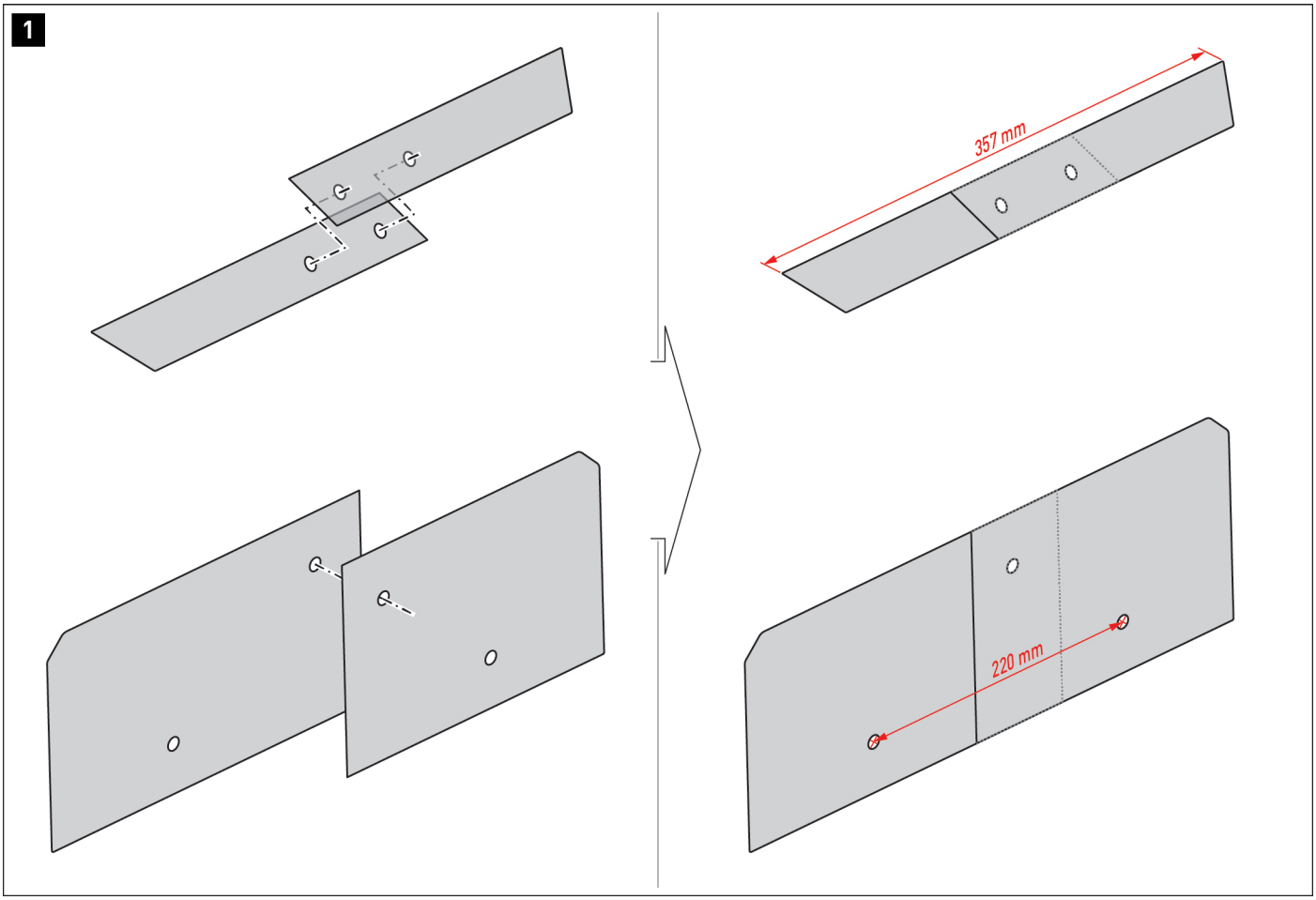

⚠ WARNING: Always wear eye and hand protection!
⚠ WARNING: Always use suitable tools!

⚠ ***NOTE:*** *This step only applies if the passenger backrest is being mounted onto the* ***TRAX ADV top case XL****.*
Use the templates included with the top case XL for installation; if you lose them, reprint the templates located in ***this*** *instruction manual.*

Carefully cut out the templates. Align the templates as shown. Make sure that **the drill holes and outer edges are perfectly aligned**.
Secure the template halves with adhesive tape.
First, check the dimensions provided in the illustration; these are used to ensure the correct alignment of the template halves.
Next, check the dimensions on the templates. If the two measurements are misaligned, the templates must be reprinted taking the print settings into account.

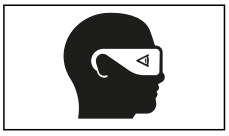

© SW-MOTECH GmbH & Co. KG

Errors and omissions excepted
Subject to technical and design changes.

2

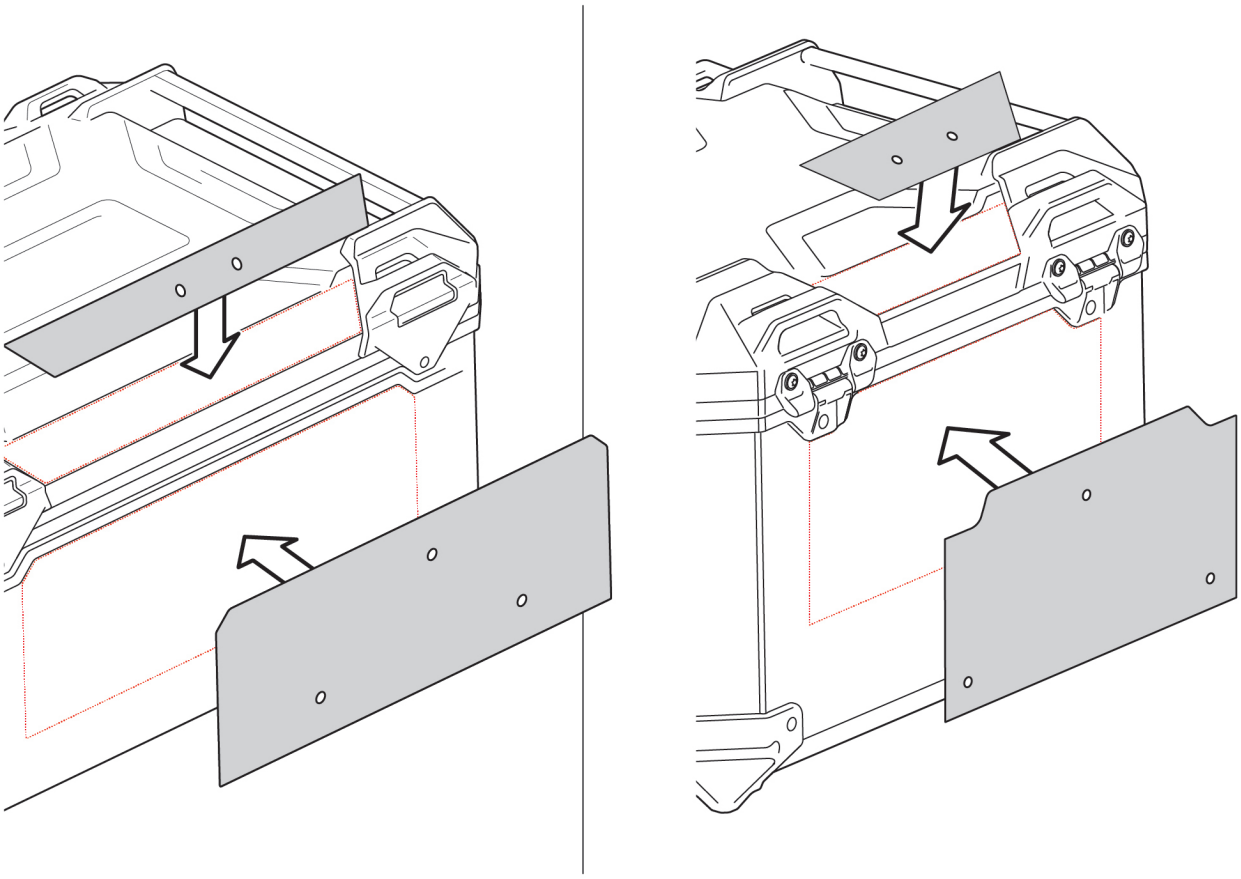

⚠ ***NOTE:*** *Check the dimensions of the templates for accuracy after printing!*

Remove the inlays from the TRAX ADV top case, if installed.

Carefully cut out the templates.
Place the template on the outside of the TRAX ADV top case (secure it with adhesive strips).

© SW-MOTECH GmbH & Co. KG

Errors and omissions excepted
Subject to technical and design changes.

3

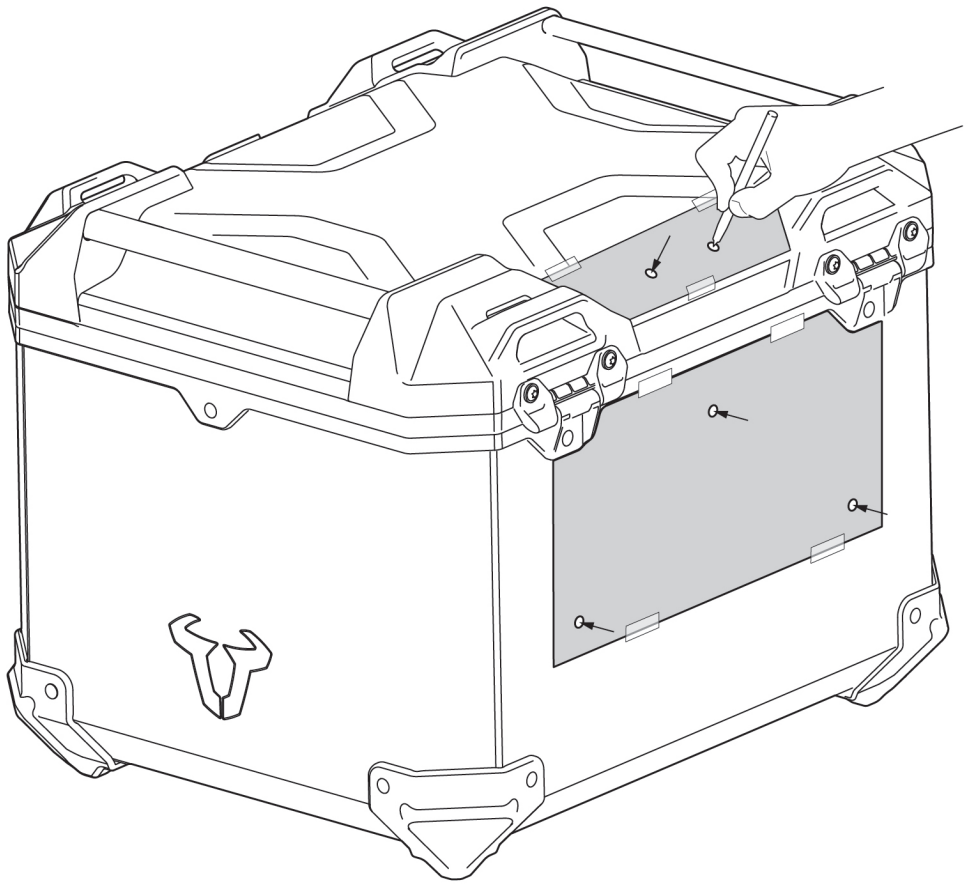

Mark the middle of the holes with a water-soluble pen. Then remove the templates.

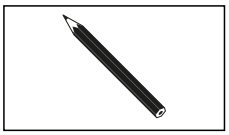

The content translation is automated.
© SW-MOTECH GmbH & Co. KG

Errors and omissions excepted
Subject to technical and design changes.

4

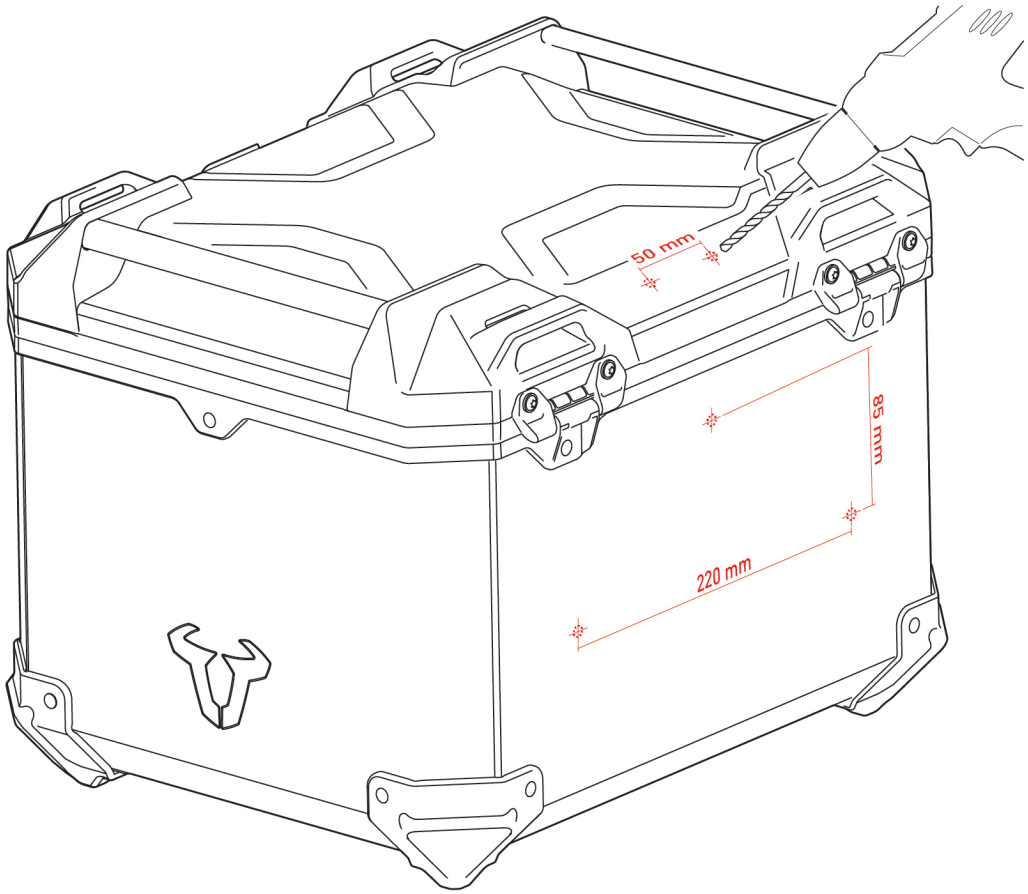

Ensure that the drilling positions you have marked correspond to the dimensions of the drilling templates.
Using a suitable 6.5 mm drill bit, drill the holes from the outside where indicated.
Deburr the drill edges.

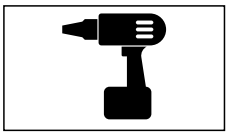

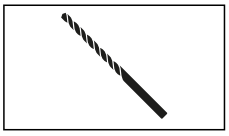

The content translation is automated.
© SW-MOTECH GmbH & Co. KG

Errors and omissions excepted
Subject to technical and design changes.

5

Mount the upper (1) and lower (2) passenger backrest to the TRAX ADV top case.
⚠ WARNING: Use liquid threadlocker.
Tighten the screws (3) as specified in the mounting instructions.

Mount the TRAX ADV top case inlays, if available.

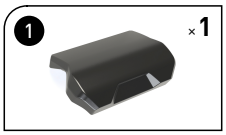

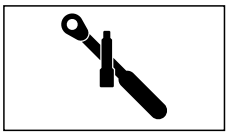

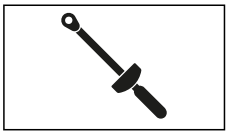

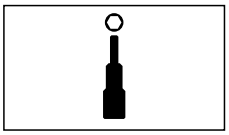

The content translation is automated.
© SW-MOTECH GmbH & Co. KG

Errors and omissions excepted
Subject to technical and design changes.

PRODUCT-SPECIFIC NOTES

⚠ ***NOTE*** *:Observe the country-specific regulations for the registration/operation of your vehicle and any applicable TÜV regulations. Have any parts requiring registration entered into your vehicle documents by your inspection centre after they have been installed.*

© SW-MOTECH GmbH & Co. KG

Errors and omissions excepted
Subject to technical and design changes.

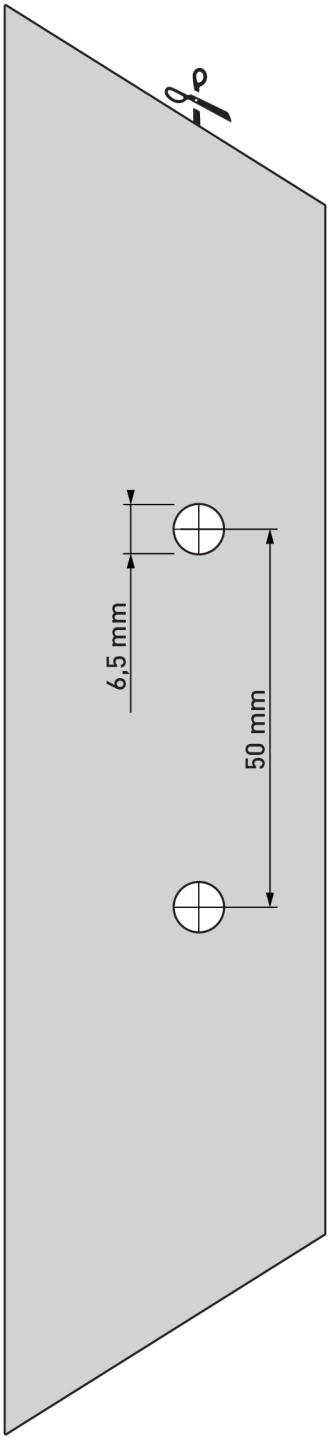

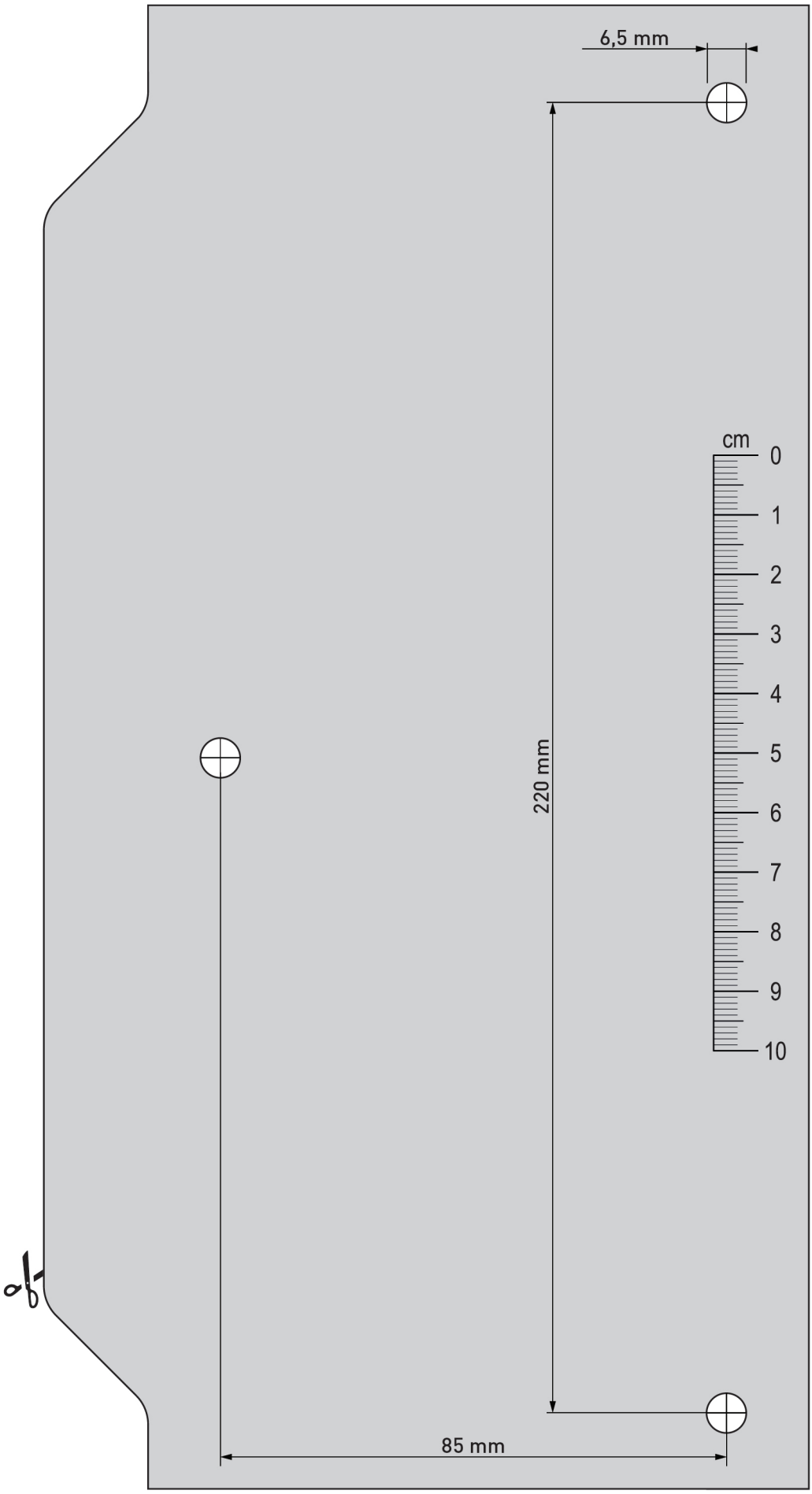

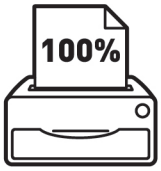

Copyright by
SW-MOTECH GmbH & Co. KG

Irrtümer und Änderungen vorbehalten. Technische und Design-Änderungen vorbehalten.
Errors and omissions expected. Technical and design-modifications are subjects to change.

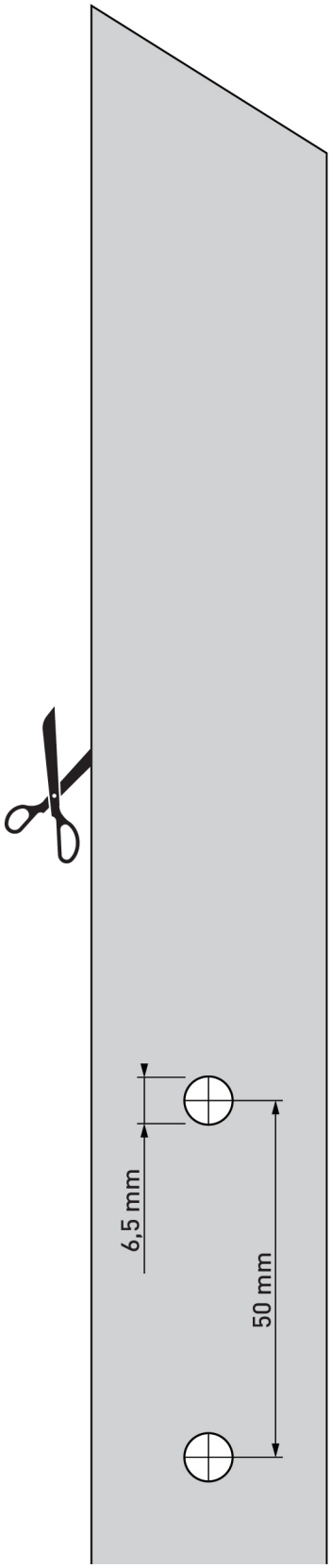

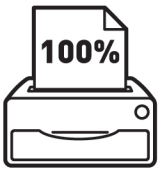

© SW-MOTECH GmbH & Co. KG
Copyright SW-MOTECH GmbH & Co. KG

Irrtümer und Änderungen vorbehalten. Technische und Design-Änderungen vorbehalten.
Errors and omissions expected. Technical and design-modifications are subjects to change.

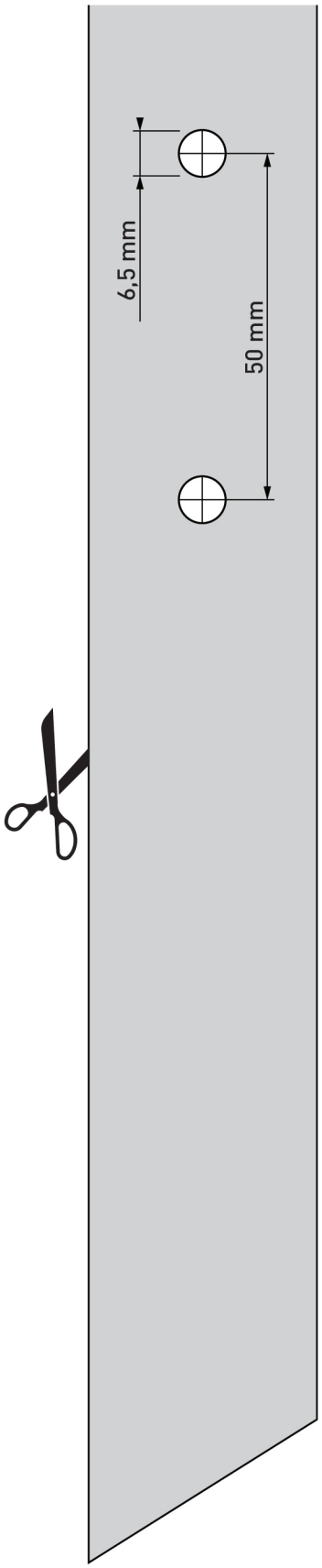

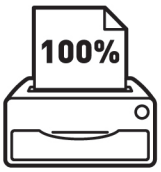

© SW-MOTECH GmbH & Co. KG
SW-MOTECH GmbH & Co. KG

Irrtümer und Änderungen vorbehalten. Technische und Design-Änderungen vorbehalten.
Errors and omissions expected. Technical and design-modifications are subjects to change.

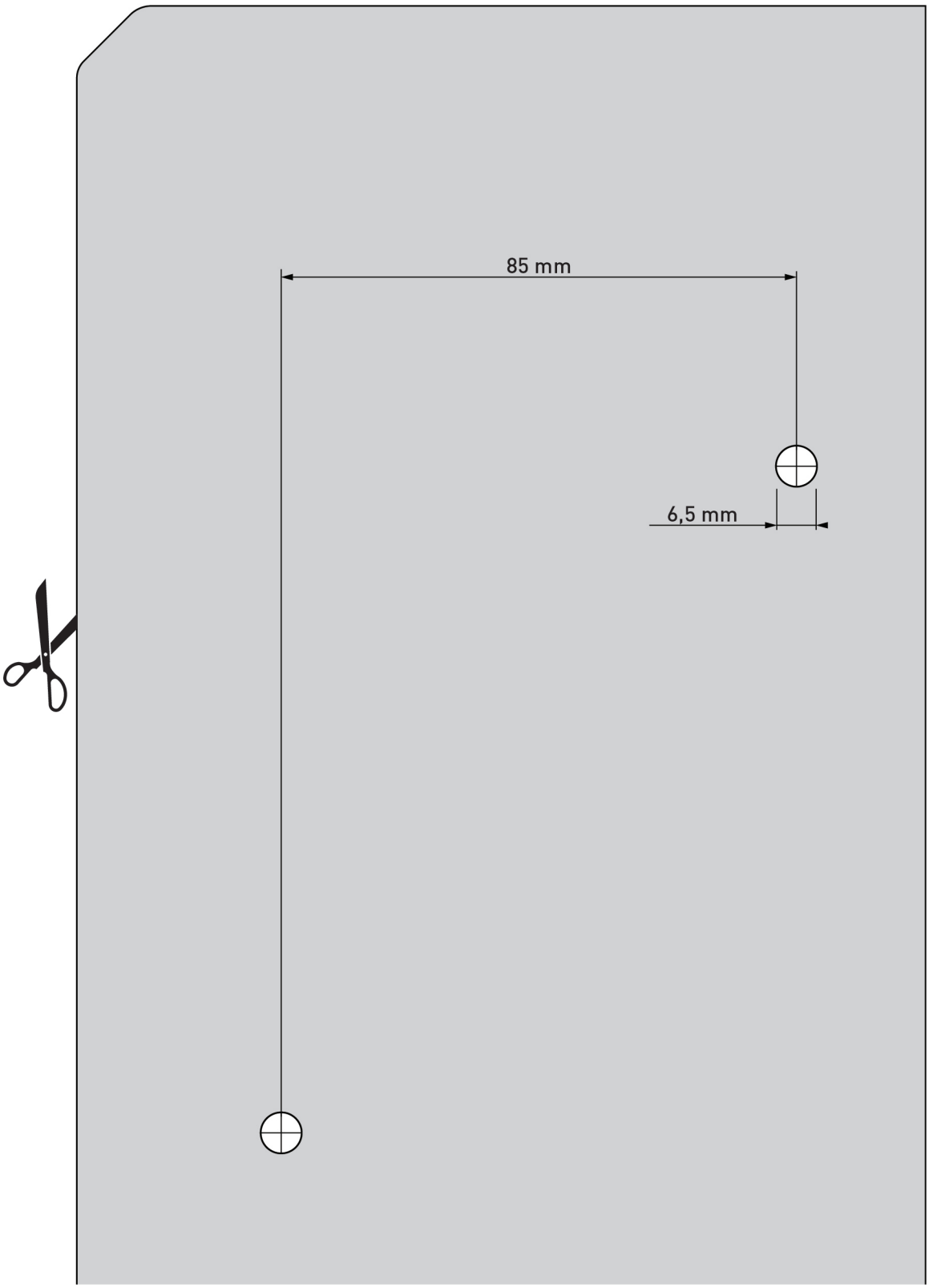

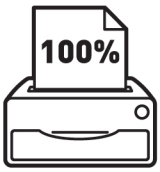

© SW-MOTECH GmbH & Co. KG
SW-MOTECH GmbH & Co. KG

Irrtümer und Änderungen vorbehalten. Technische und Design-Änderungen vorbehalten.
Errors and omissions expected. Technical and design-modifications are subjects to change.

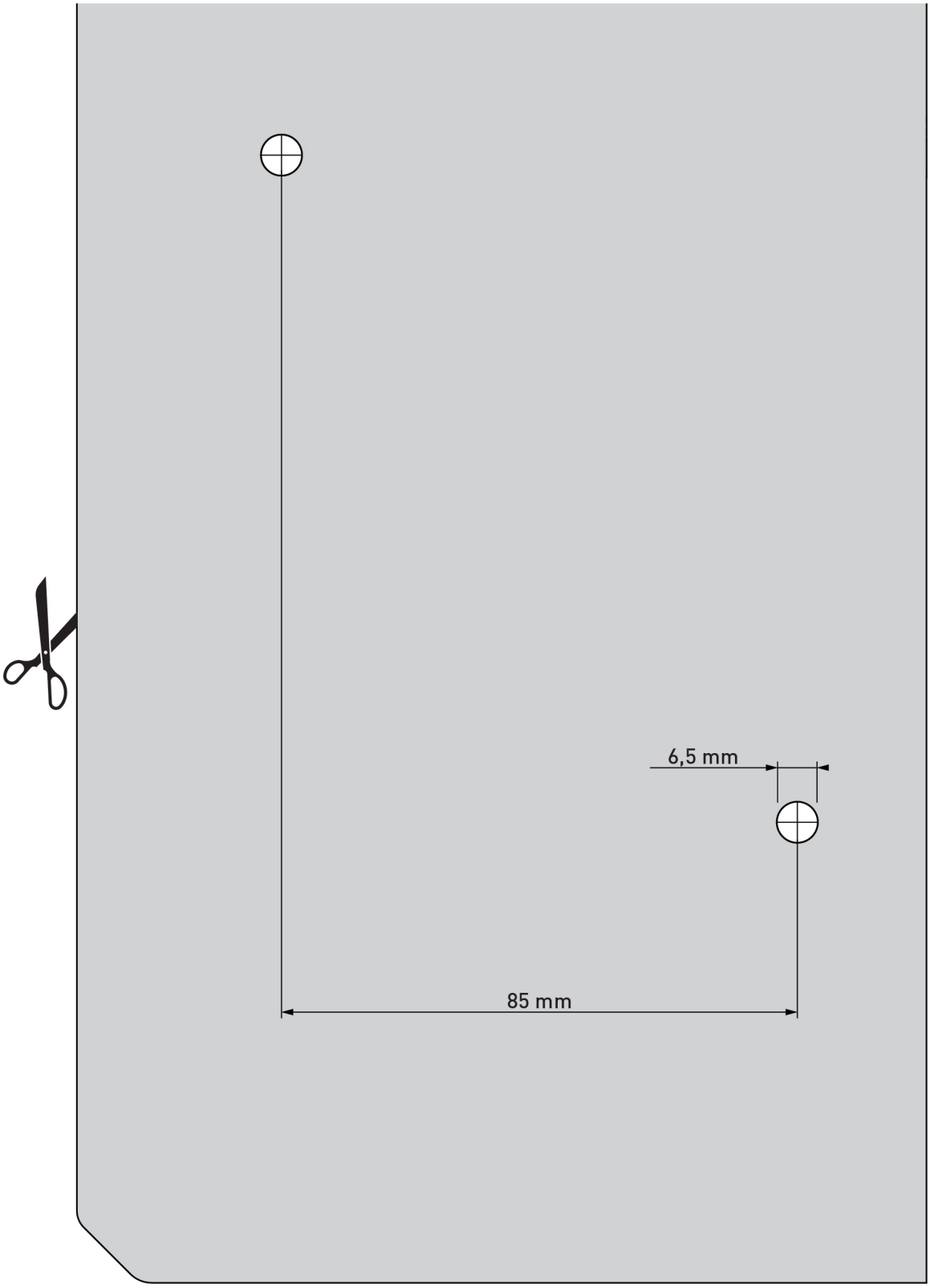

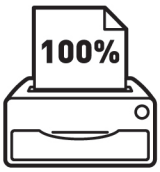

Copyright
© SW-MOTECH GmbH & Co. KG
SW-MOTECH GmbH & Co. KG

Irrtümer und Änderungen vorbehalten. Technische und Design-Änderungen vorbehalten.
Errors and omissions expected. Technical and design-modifications are subjects to change.