Item number: **BC.TRS.00.101.30000**	Revision: **00** · Date: **11 - 2025**

PRO Sport tank bag

~ 0.5 h.	EASY DIFFICULT

ENGLISH ·Thank you for choosing this premium product from SW-MOTECH. Visit our online shop for more information (e.g. model assignments). Required documents (e.g. national type approval) are available there for you to download.

Please read and understand all the instructions, safety information and warnings in these mounting instructions before mounting and using the product in order to avoid injury and damage. Keep these mounting instructions for reference.

This product was developed for vehicles in factory condition. Compatibility with original accessories or accessories from other manufacturers cannot be guaranteed.

These mounting instructions have been prepared to the best of our current knowledge. No legal claims relating to accuracy can be made. Errors and omissions excepted. We reserve the right to make technical and design changes. The copyright is held by SW-MOTECH.

SAFETY WARNING SYMBOL

⚠ **This warning symbol is used in these mounting instructions to warn of deadly dangers, injuries or other hazards. The words DANGER, WARNING or CAUTION are used as part of this warning symbol to convey important safety messages and information relating to the installation and use of this product. These words, together with the safety warning symbol, mean:**

⚠ **DANGER:** Indicates a hazardous situation which, if not avoided, will result in death or serious injury!

⚠ **WARNING:** Indicates a hazardous situation which, if not avoided, may result in death or serious injury!

⚠ **CAUTION:** Indicates a hazardous situation which, if not avoided, may result in minor or moderate injury!

⚠ ***NOTE:*** Important information, but not relating to a risk of death or injury (property damage only)!

GENERAL INFORMATION

⚠ **WARNING: Assembly and/or maintenance of this product requires advanced technical skill, appropriate tools, and a good understanding of tool usage and torque specifications. For your own safety, SW-MOTECH recommends having the assembly and/or maintenance carried out by a qualified and certified motorcycle workshop.**

⚠ **WARNING: If you do choose to assemble this product yourself, carefully and fully read the mounting instructions before assembly and use, and follow all instructions to avoid serious injury or death. Also observe all relevant information in the vehicle manual when mounting or using the product. IF YOU DO NOT UNDERSTAND ANY PART OF THESE MOUNTING INSTRUCTIONS OR NEED AN EXPLANATION AS TO A SPECIFIC INSTRUCTION, DO NOT ATTEMPT TO INSTALL THIS PRODUCT WITHOUT CONSULTING SW-MOTECH FOR ASSISTANCE!**

PREPARATION: Read the mounting instructions carefully and make sure that all parts on the parts list are available.

⚠ **CAUTION: Ensure that your vehicle is standing securely. Switch off the engine and remove the ignition key. Allow the engine/exhaust to cool down if necessary. Disconnect the battery when working on the electrical system. Only use proper tools and always wear safety goggles and gloves during assembly and maintenance. Have a second person help you with assembly and maintenance.**

ASSEMBLY: All parts and connections removed from the vehicle must be reinstalled according to the vehicle manufacturer's specifications or replaced with parts and hardware supplied by SW-MOTECH.

⚠ **WARNING: Secure all threads with a medium-strength liquid threadlocker, unless otherwise specified.**

⚠ **DANGER: Tightening torques not defined by SW-MOTECH must be obtained from the vehicle manufacturer or a certified motorbike workshop.**

FUNCTIONAL CHECK: After mounting the product, ensure that no moving parts are obstructed and that the function of the vehicle is not impeded. Cables and hoses must not rub against each other and/or be hindered in any way.

⚠ **WARNING: Carry out a comprehensive functionality check before you start to drive. Check the tightening torque of all connections and the tight fit of the product after the first 50 km and then at regular intervals. Mounted accessories can change the handling and stability of the vehicle.**

SW-MOTECH GmbH & Co. KG
Ernteweg 7-10
35282 Rauschenberg
Germany

info@sw-motech.com
www.sw-motech.com

The content translation is automated.
© SW-MOTECH GmbH & Co. KG

Errors and omissions excepted
Subject to technical and design changes.

Take note of the symbols and what they mean in the ASSEMBLY section. If the term OEM appears in the ASSEMBLY section, the vehicle manufacturer's specifications must be observed and applied.

If you have any questions, please don't hesitate to contact our Customer Service team or our distributors. You can find our telephone number and a list of our distributors in our online shop:
www.sw-motech.com

Use thread locker: Indicates that a thread must be coated with liquid thread locker. H (HIGH): high strength; M (MEDIUM): medium strength; L (LOW): low strength.

Tighten/note the tightening torque information: Indicates the tightening torque of a part specified by SW-MOTECH or the vehicle manufacturer (OEM).

The content translation is automated.
© SW-MOTECH GmbH & Co. KG

Errors and omissions excepted
Subject to technical and design changes.

1

1

TRT.00.787.10000/B

1/1

2

TRT.00.787.500.02

1/1

2

3

BC.TRS.00.101.30000

1/1

4

M5 x 16; DIN 7830

SC.ST.05.016.48.7380O.109

4/4

5

ISK.911.03

1/1

© SW-MOTECH GmbH & Co. KG

Errors and omissions excepted
Subject to technical and design changes.

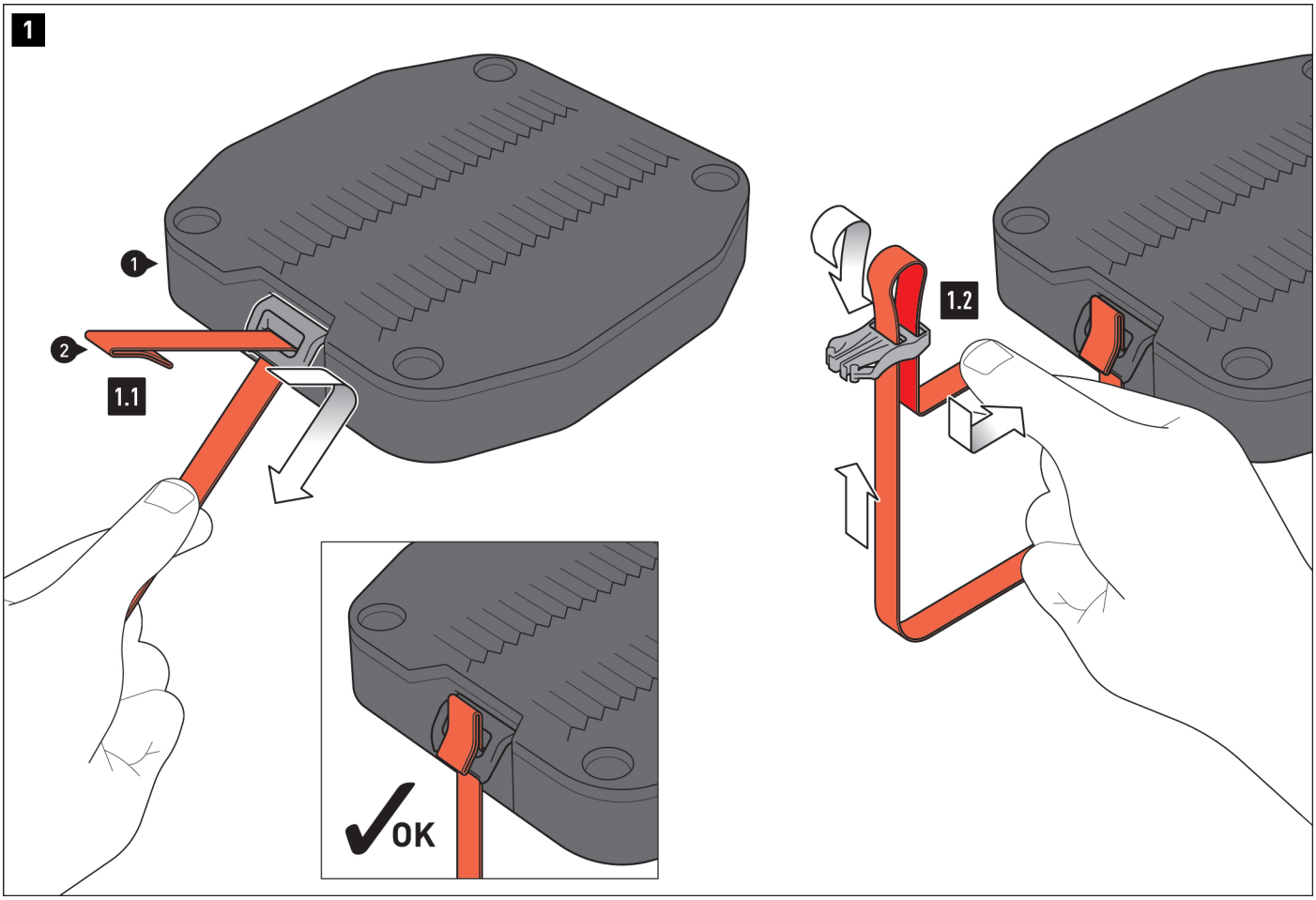

⚠ WARNING: Always wear eye and hand protection!
⚠ WARNING: Always use suitable tools!

MOUNTING THE TOP RING

⚠ WARNING: Since this is a universal product, please make sure that the product can be attached and used correctly and properly on your vehicle type BEFORE using for the first time!

Step [1.1]: Guide the red pull strap (2) through the eyelet of the release mechanism of the top ring (1).
⚠ ***NOTE:*** Pay attention to the positioning of the reinforced end piece of the pull strap (2) shown.

Step [1.2]: Connect the quick-release buckle (included with the pull strap) to the pull strap (2).

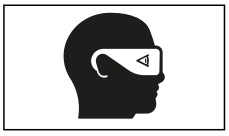

© SW-MOTECH GmbH & Co. KG

Errors and omissions excepted
Subject to technical and design changes.

2

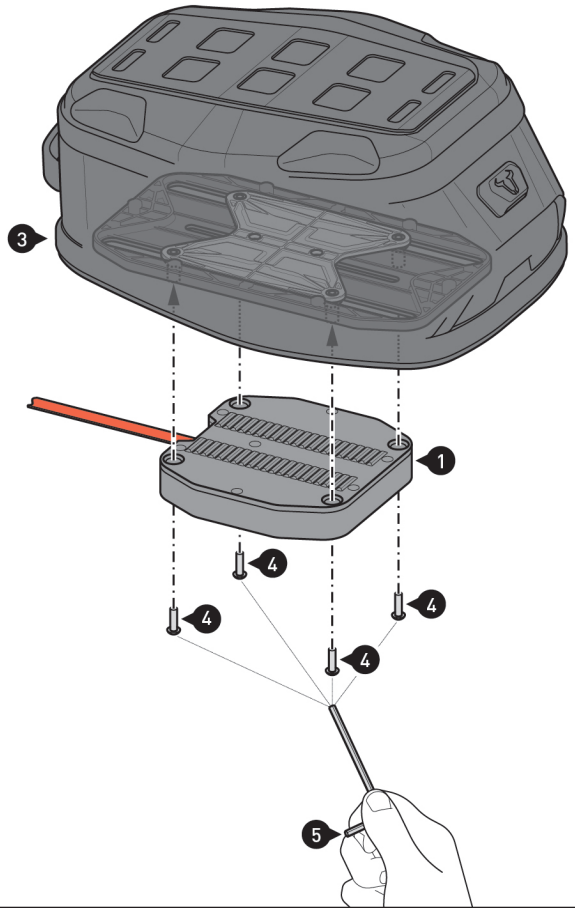

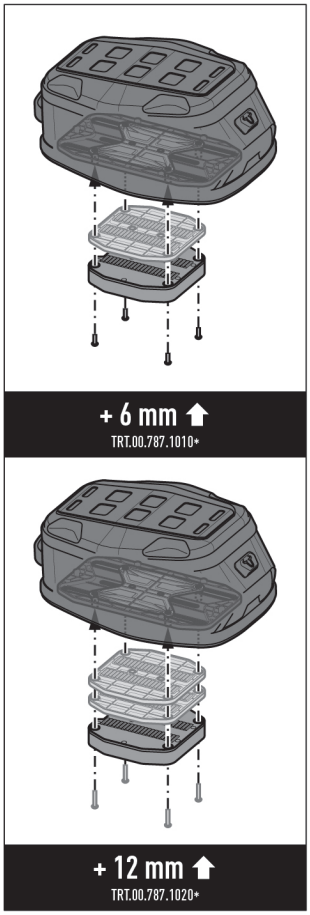

⚠ ***NOTE:*** *Certain tank shapes require the installation of an additional riser (•) (sold separately). The riser required for your vehicle must be installed as shown in the detailed drawing on the right.*

Loosely screw the top ring (1) to the adjustment plate of the tank bag (3). The top ring (1) must still be able to be moved.
⚠ WARNING: Use LOW-STRENGTH thread locker!
Do not tighten the screws (4) yet.

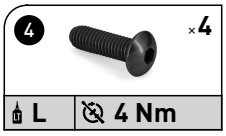

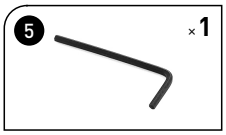

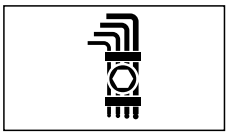

© SW-MOTECH GmbH & Co. KG

Errors and omissions excepted
Subject to technical and design changes.

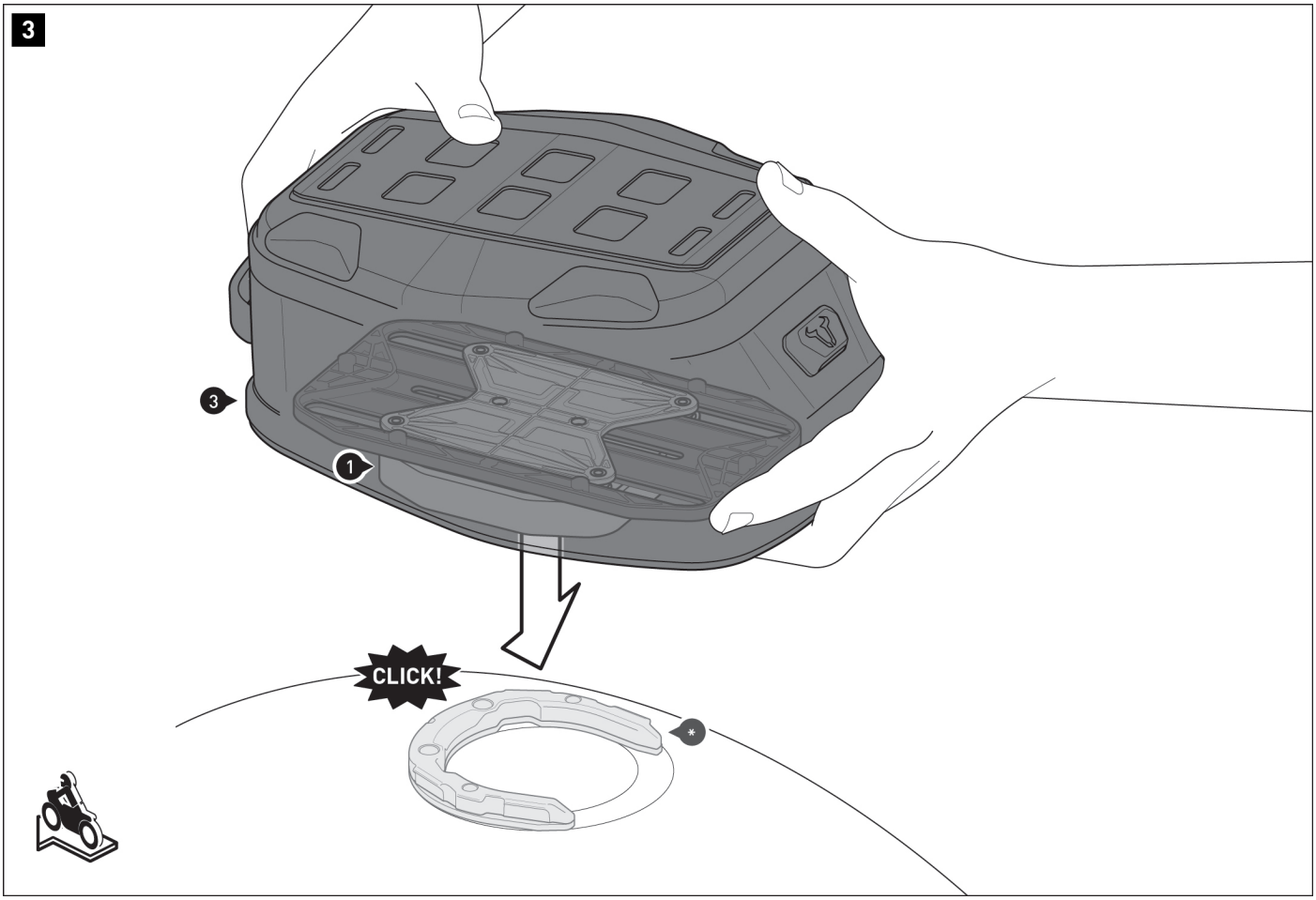

ADJUSTING THE TANK BAG

Place the tank bag (3) onto the mounted tank ring (1) using the top ring (•).
Listen for the clearly audible click.

The content translation is automated.
© SW-MOTECH GmbH & Co. KG

Errors and omissions excepted
Subject to technical and design changes.

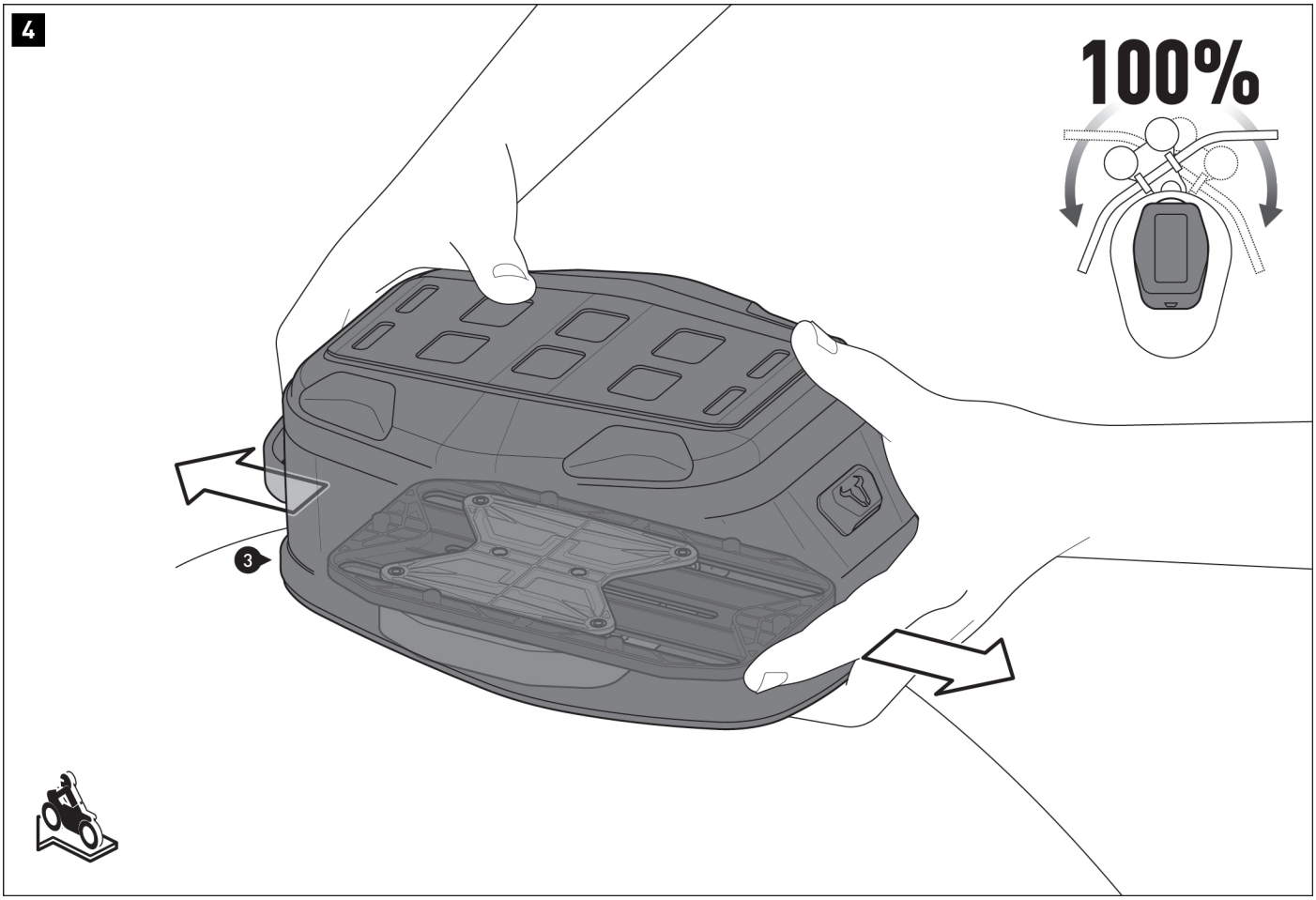

Now position the tank bag (3) on the guide rail according to your preferred riding position.
⚠ DANGER: Ensure that the handlebars and controls have sufficient clearance and that the tank bag (3) is securely and evenly seated on the tank. Also ensure that there is sufficient clearance between the tank bag (3) and the tank surface in all riding situations (both loaded and unloaded) in order to prevent paint damage.

⚠ ***NOTE:*** *Dirt or debris on the vehicle can damage surfaces such as the paintwork. If the required distance between the tank bag (3) and the vehicle cannot be maintained, always use a paint protection film or tank pad (not included in the delivery). SW-MOTECH accepts no liability for paint damage.*

The content translation is automated.
© SW-MOTECH GmbH & Co. KG

Errors and omissions excepted
Subject to technical and design changes.

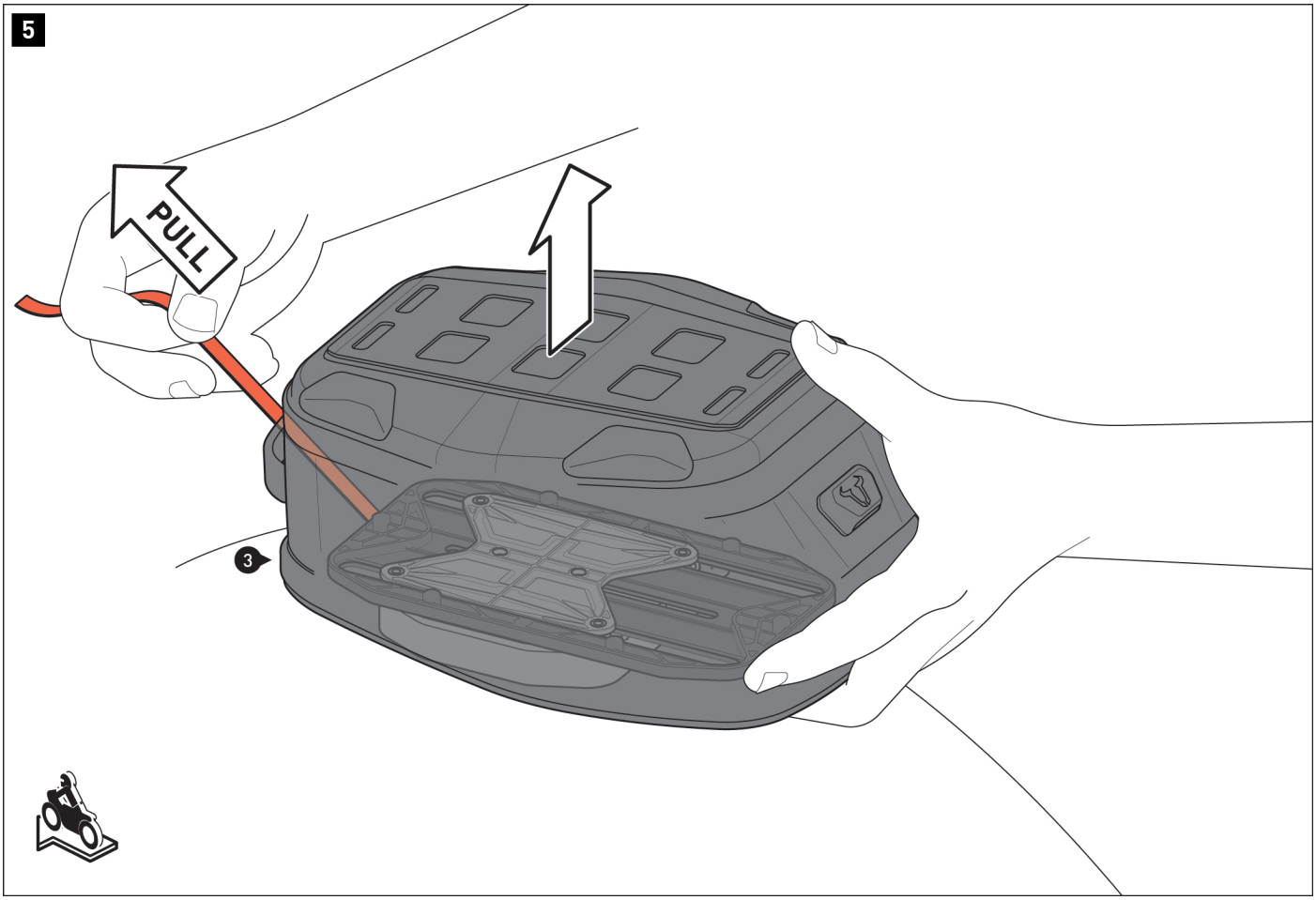

Unlock the top ring (1) and carefully lift the tank bag (3) upwards off the tank ring (·) without moving the top ring (1).
⚠ ***NOTE:*** *If the top ring shifts when removed from the tank ring (·), tighten the screws (4) just enough so that the top ring (1) can still be moved.*

© SW-MOTECH GmbH & Co. KG

Errors and omissions excepted
Subject to technical and design changes.

6

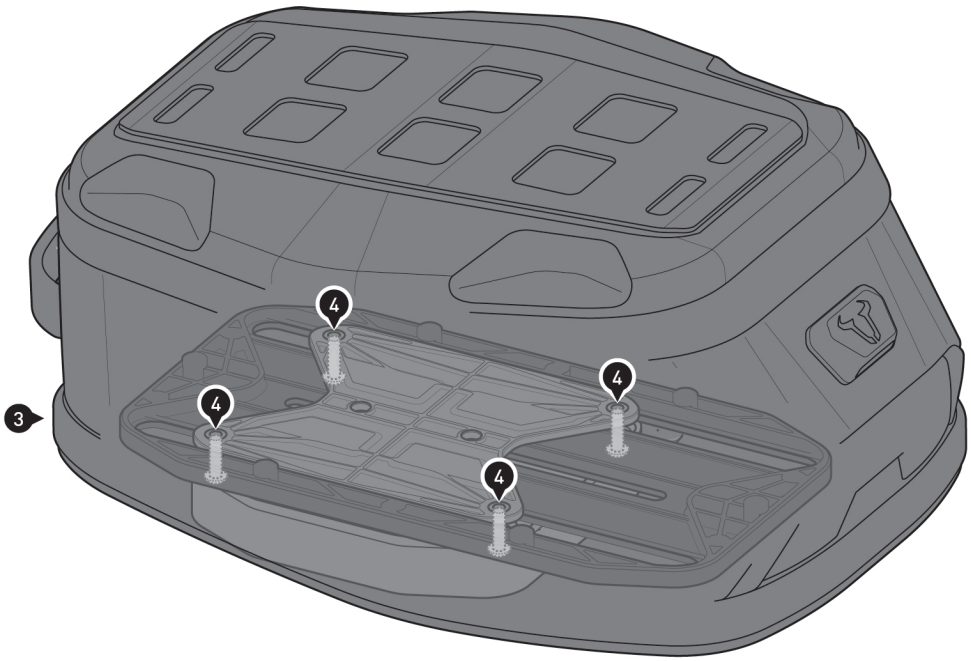

FINAL ASSEMBLY OF THE TOP RING

After adjustment, tighten the (4) screws as specified in the mounting instructions.
⚠ CAUTION: Overtightening the screws (4) will damage the plastic parts.

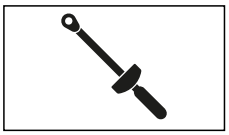

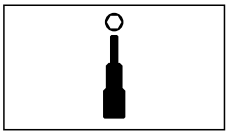

The content translation is automated.
© SW-MOTECH GmbH & Co. KG

Errors and omissions excepted
Subject to technical and design changes.

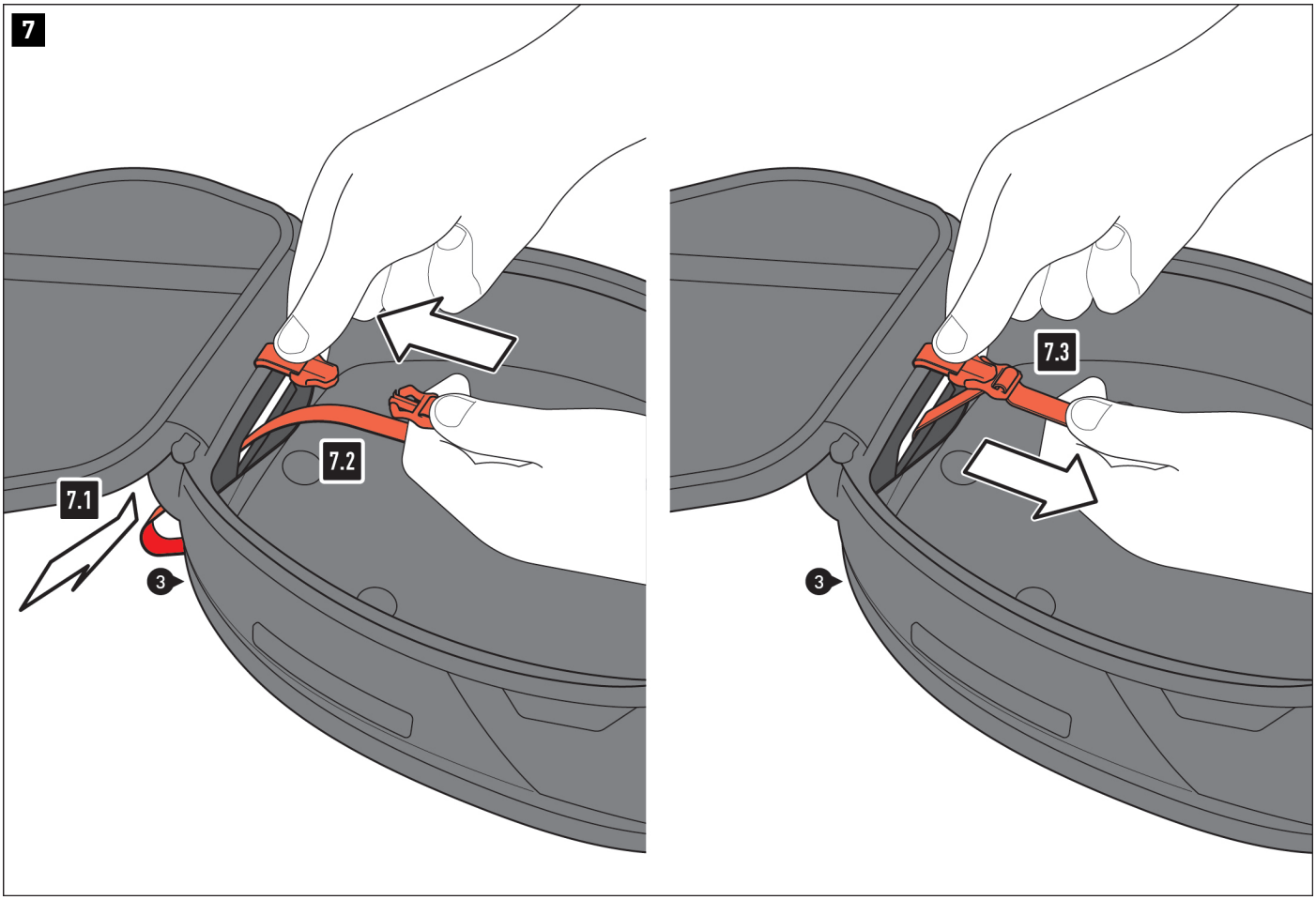

Step [7.1]: Feed the end of the pull strap (2) with the quick-release buckle through the front cable opening of the tank bag (3).
Step [7.2]: Connect the quick-release buckle attached to the pull strap (2) to the buckle housing attached to the tank bag (3).
Step [7.3]: Now pull the pull strap (2).

The content translation is automated.
© SW-MOTECH GmbH & Co. KG

Errors and omissions excepted
Subject to technical and design changes.

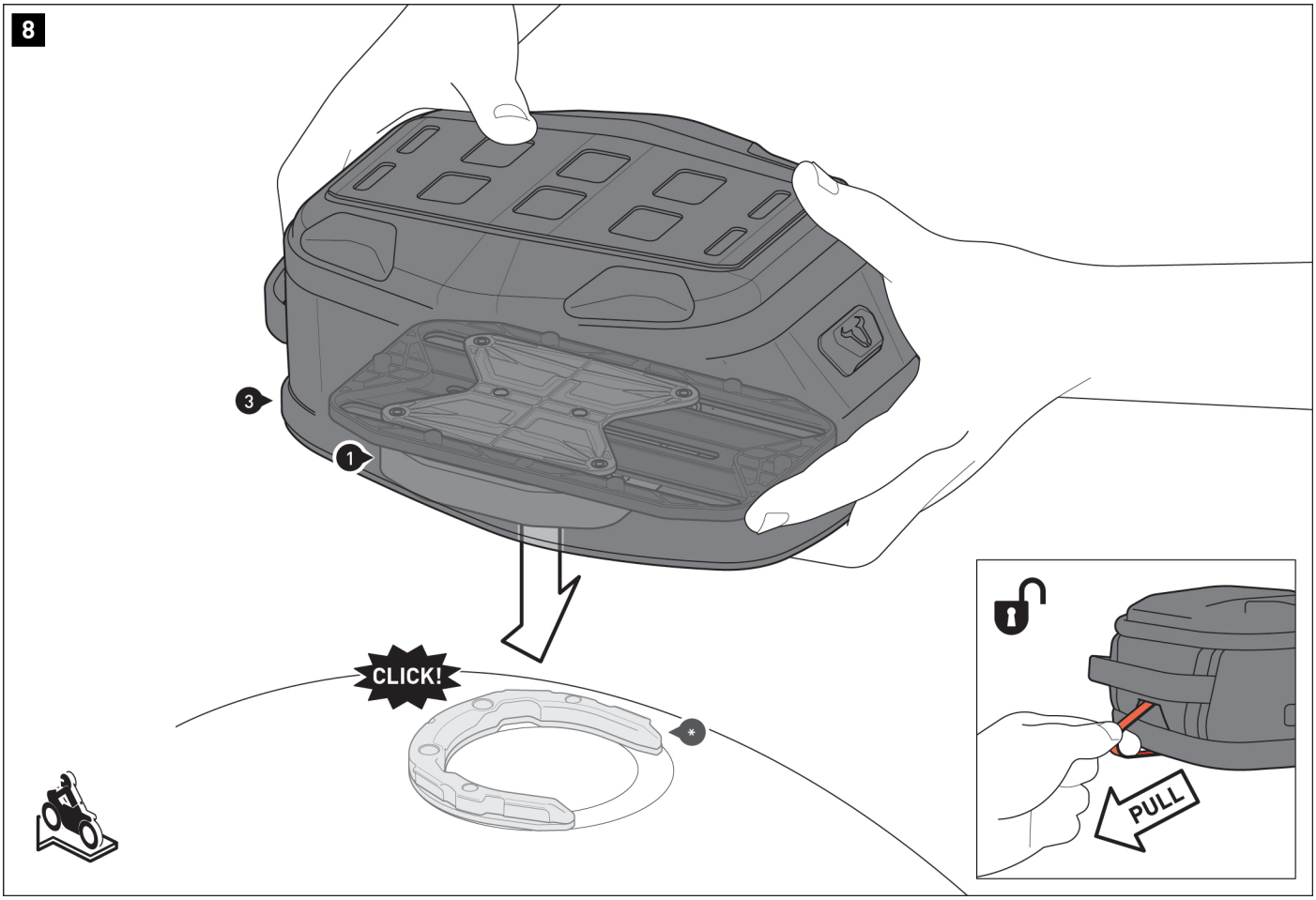

Place the tank bag (3) on the tank ring (•). Listen for the clearly audible click. Then, and before each ride, check that the tank bag (3) is securely in place.

To release the tank bag (3), simply pull the pull strap (2) and remove the tank bag (3) from the tank ring (•).

The content translation is automated.
© SW-MOTECH GmbH & Co. KG

Errors and omissions excepted
Subject to technical and design changes.

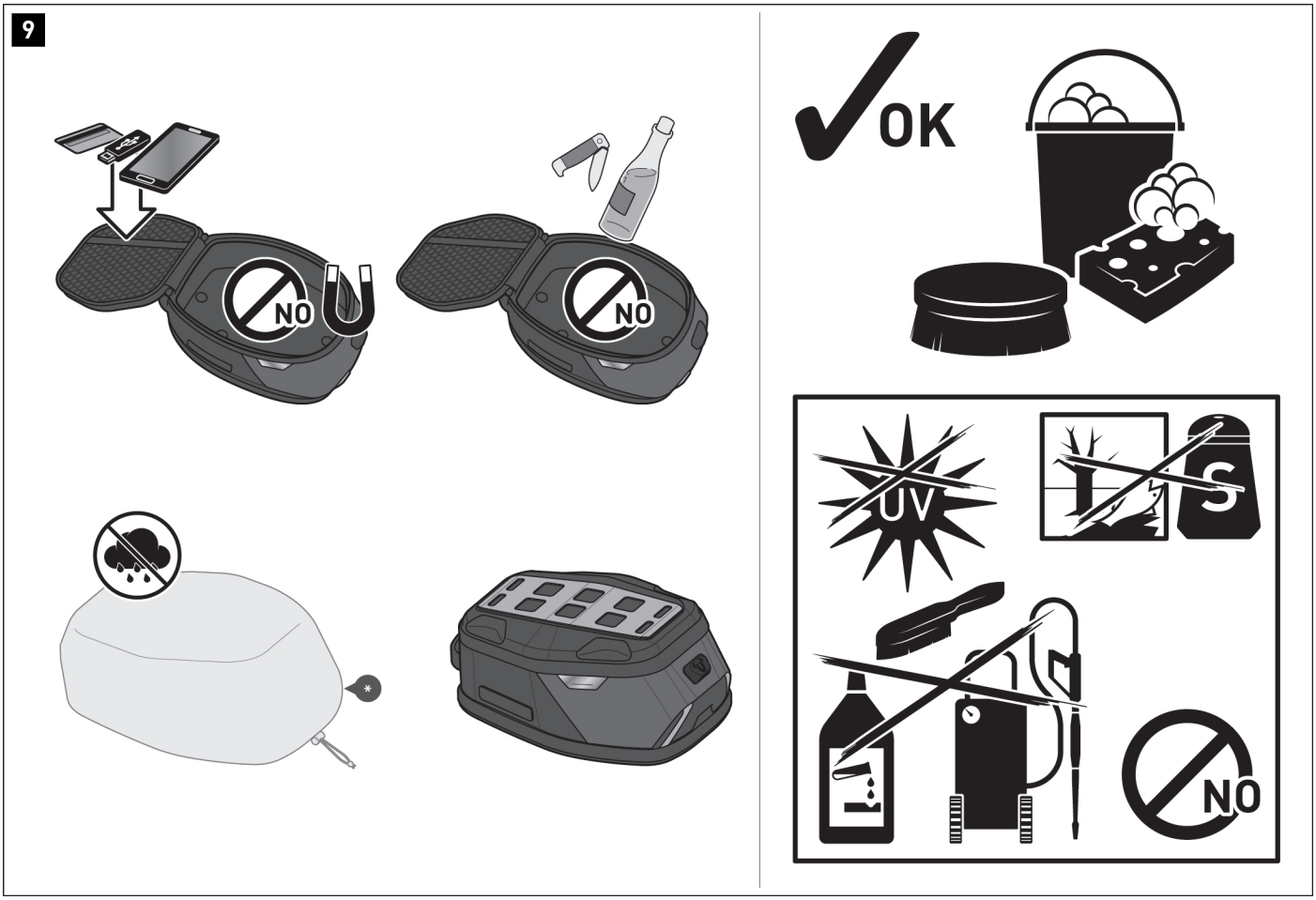

LOADING

⚠ ***CAUTION:*** *Store magnetically sensitive items (e.g. credit cards, USB flash drives, and smartphones) only in the mesh compartment of the lid. Do not store any sharp or fragile items.*
⚠ ***WARNING:*** *Attach **ONLY** designated SW-MOTECH products to the MOLLE system.*
⚠ ***NOTE:*** *Always use the rain cover (·) (sold separately) to protect your luggage from moisture.*
⚠ **WARNING: The maximum load capacity of the tank bag (3) is 3 kg (6.6 lbs).**

CARE

For cleaning, use **ONLY** a soft textile brush, a cloth or a sponge and warm soapy water! Then rinse with clean water.
DO NOT use harsh cleaning agents, abrasive cleaning utensils or high-pressure cleaners! After winter rides, be sure to clean the tank bag (3) in order to prevent damage from salt.
⚠ **CAUTION: Surface materials may undergo colour changes (fading) as a result of prolonged and intense exposure to sunlight and environmental factors (e.g. smog and acid rain). Petrol and similar substances must be washed off immediately. SW-MOTECH accepts no liability for colour changes.**

The content translation is automated.
© SW-MOTECH GmbH & Co. KG

Errors and omissions excepted
Subject to technical and design changes.

PRODUCT-SPECIFIC NOTES

⚠ ***NOTE:*** *Observe the country-specific regulations for the registration/operation of your vehicle and/or applicable TÜV regulations. After installatoin, have any parts subject to registration entered into the vehicle documents by your inspection authority.*

⚠ DANGER: Since this is a universal product, please be sure to check that the product can be properly and correctly attached to and used on your vehicle model before using it for the first time! After mounting, check that all vehicle components are unobstructed and can function properly! Lights such as taillights and turn light indicators must not be impeded in their function! Cables, wires, and hoses should not rub and/or squeeze against anything!

⚠ DANGER: Perform a thorough functional check before starting your journey.

⚠ DANGER: Check that the product is properly fitted before starting your journey and at every rest stop (every 200 km).

⚠ DANGER: The driving/braking behavior of the motorcycle changes noticeably after mounting this product!

⚠ DANGER: Lean angle and ground clearance may be restricted by this product!

⚠ DANGER: Not suitable for off-road use.

⚠ DANGER: The maximum payload of the vehicle as defined by the vehicle manufacturer may NOT be exceeded.

see LOAD	≤ 130km/h (≤ 80mph)

© SW-MOTECH GmbH & Co. KG

Errors and omissions excepted
Subject to technical and design changes.