Item number: **SBL.23.017.10001/B**	Revision: **00** · Date: **09 - 2023**

Crash bar

~ 1.5 h.	EASY DIFFICULT

ENGLISH ·Thank you for choosing this premium product from SW-MOTECH. Visit our online shop for more information (e.g. model assignments). Required documents (e.g. national type approval) are available there for you to download.
Please read and understand all the instructions, safety information and warnings in these mounting instructions before mounting and using the product in order to avoid injury and damage. Keep these mounting instructions for reference.
This product was developed for vehicles in factory condition. Compatibility with original accessories or accessories from other manufacturers cannot be guaranteed.
These mounting instructions have been prepared to the best of our current knowledge. No legal claims relating to accuracy can be made. Errors and omissions excepted. We reserve the right to make technical and design changes. The copyright is held by SW-MOTECH.

SAFETY WARNING SYMBOL

⚠ **This warning symbol is used in these mounting instructions to warn of deadly dangers, injuries or other hazards. The words DANGER, WARNING or CAUTION are used as part of this warning symbol to convey important safety messages and information relating to the installation and use of this product. These words, together with the safety warning symbol, mean:**

⚠ **DANGER:** Indicates a hazardous situation which, if not avoided, will result in death or serious injury!

⚠ **WARNING:** Indicates a hazardous situation which, if not avoided, may result in death or serious injury!

⚠ **CAUTION:** Indicates a hazardous situation which, if not avoided, may result in minor or moderate injury!

⚠ ***NOTE:*** Important information, but not relating to a risk of death or injury (property damage only)!

GENERAL INFORMATION

⚠ **WARNING: Assembly and/or maintenance of this product requires advanced technical skill, appropriate tools, and a good understanding of tool usage and torque specifications. For your own safety, SW-MOTECH recommends having the assembly and/or maintenance carried out by a qualified and certified motorcycle workshop.**

⚠ **WARNING: If you do choose to assemble this product yourself, carefully and fully read the mounting instructions before assembly and use, and follow all instructions to avoid serious injury or death. Also observe all relevant information in the vehicle manual when mounting or using the product. IF YOU DO NOT UNDERSTAND ANY PART OF THESE MOUNTING INSTRUCTIONS OR NEED AN EXPLANATION AS TO A SPECIFIC INSTRUCTION, DO NOT ATTEMPT TO INSTALL THIS PRODUCT WITHOUT CONSULTING SW-MOTECH FOR ASSISTANCE!**

PREPARATION: Read the mounting instructions carefully and make sure that all parts on the parts list are available.

⚠ **CAUTION: Ensure that your vehicle is standing securely. Switch off the engine and remove the ignition key. Allow the engine/exhaust to cool down if necessary. Disconnect the battery when working on the electrical system. Only use proper tools and always wear safety goggles and gloves during assembly and maintenance. Have a second person help you with assembly and maintenance.**

ASSEMBLY: All parts and connections removed from the vehicle must be reinstalled according to the vehicle manufacturer's specifications or replaced with parts and hardware supplied by SW-MOTECH.

⚠ **WARNING: Secure all threads with a medium-strength liquid threadlocker, unless otherwise specified.**

⚠ **DANGER: Tightening torques not defined by SW-MOTECH must be obtained from the vehicle manufacturer or a certified motorbike workshop.**

FUNCTIONAL CHECK: After mounting the product, ensure that no moving parts are obstructed and that the function of the vehicle is not impeded. Cables and hoses must not rub against each other and/or be hindered in any way.

⚠ **WARNING: Carry out a comprehensive functionality check before you start to drive. Check the tightening torque of all connections and the tight fit of the product after the first 50 km and then at regular intervals. Mounted accessories can change the handling and stability of the vehicle.**

SW-MOTECH GmbH & Co. KG
Ernteweg 7-10
35282 Rauschenberg
Germany

info@sw-motech.com
www.sw-motech.com

The content translation is automated.
© SW-MOTECH GmbH & Co. KG

Errors and omissions excepted
Subject to technical and design changes.

Take note of the symbols and what they mean in the ASSEMBLY section. If the term OEM appears in the ASSEMBLY section, the vehicle manufacturer's specifications must be observed and applied.

If you have any questions, please don't hesitate to contact our Customer Service team or our distributors. You can find our telephone number and a list of our distributors in our online shop:
www.sw-motech.com

Do not use thread lock: Indicates that no liquid thread lock should be used at this point.

Tighten/note the tightening torque information: Indicates the tightening torque of a part specified by SW-MOTECH or the vehicle manufacturer (OEM).

Use thread locker: Indicates that a thread must be coated with liquid thread locker. H (HIGH): high strength; M (MEDIUM): medium strength; L (LOW): low strength.

The content translation is automated.
© SW-MOTECH GmbH & Co. KG

Errors and omissions excepted
Subject to technical and design changes.

5

1	2	3	4	5	6
SBL.23.017.901.01.11	M10 x 180; DIN 931 SC.ST.10.180.01.931.109	Ø 25 / Ø 10.5 / h 4 DB.ST.0250.0105.0040.01	Ø 30 / ø 10.5 / h 44 DB.ST.0300.0105.0440.02	Ø 30 / ø 10.5 / h 12 DB.ST.0300.0105.0120.02	M10; ISO 4032 MU.ST.10.01.4032.08
1/1	1/1	1/2	1/1	1/1	1/2

7	8	9	10	11
M12 x 40; DIN 912 SC.ST.12.040.01.912.088	ø 13; DIN 125 US.ST.130.02.125	M12; DIN 985 MU.ST.12.01.985.08	M6 x 25; DIN 912 SC.ST.06.025.02.912.088	ø 6.4; DIN 125 US.ST.064.02.125
1/1	2/4	1/2	3/3	3/6

6

12	13	14	15	16	17
SBL.23.017.902.01.11	M10 x 190; DIN 931 SC.ST.10.190.01.931.109	Ø 25 / Ø 10.5 / h 4 DB.ST.0250.0105.0040.01	Ø 30 / ø 10.5 / h 15 DB.ST.0300.0105.0150.02	M10; ISO 4032 MU.ST.10.01.4032.08	M12 x 50; DIN 912 SC.ST.12.050.01.912.088
1/1	1/1	1/2	1/1	1/2	1/1

18	19	20	21	22	23
ø 13; DIN 125 US.ST.130.02.125	Ø 25 / ø 12.5 / h 15 DB.00.250.125.015.01	M12; DIN 985 MU.ST.12.01.985.08	M6 x 40; DIN 912 SC.ST.06.040.02.912.088	ø 6.4; DIN 125 US.ST.064.02.125	Ø 12 / ø 8.4 / h 15 DB.ST.120.084.015.01
2/4	1/1	1/2	3/3	3/6	3/3

7

24	25	26	27
M6 x 16; DIN 912 SC.ST.06.016.02.912.088	M6; DIN 985 MU.ST.06.01.985.08	KES.RD.260.0270.02.GL	SBL.00.051.005/B
2/2	2/2	2/2	2/2

The content translation is automated.
© SW-MOTECH GmbH & Co. KG

Errors and omissions excepted
Subject to technical and design changes.

1

⚠ WARNING: Always wear eye and hand protection!
⚠ WARNING: Always use suitable tools!

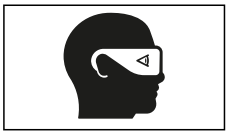

Loosen the screws shown and push the fairing slightly outwards.
Remove the coolant reservoir from the vehicle frame.

The content translation is automated.
© SW-MOTECH GmbH & Co. KG

Errors and omissions excepted
Subject to technical and design changes.

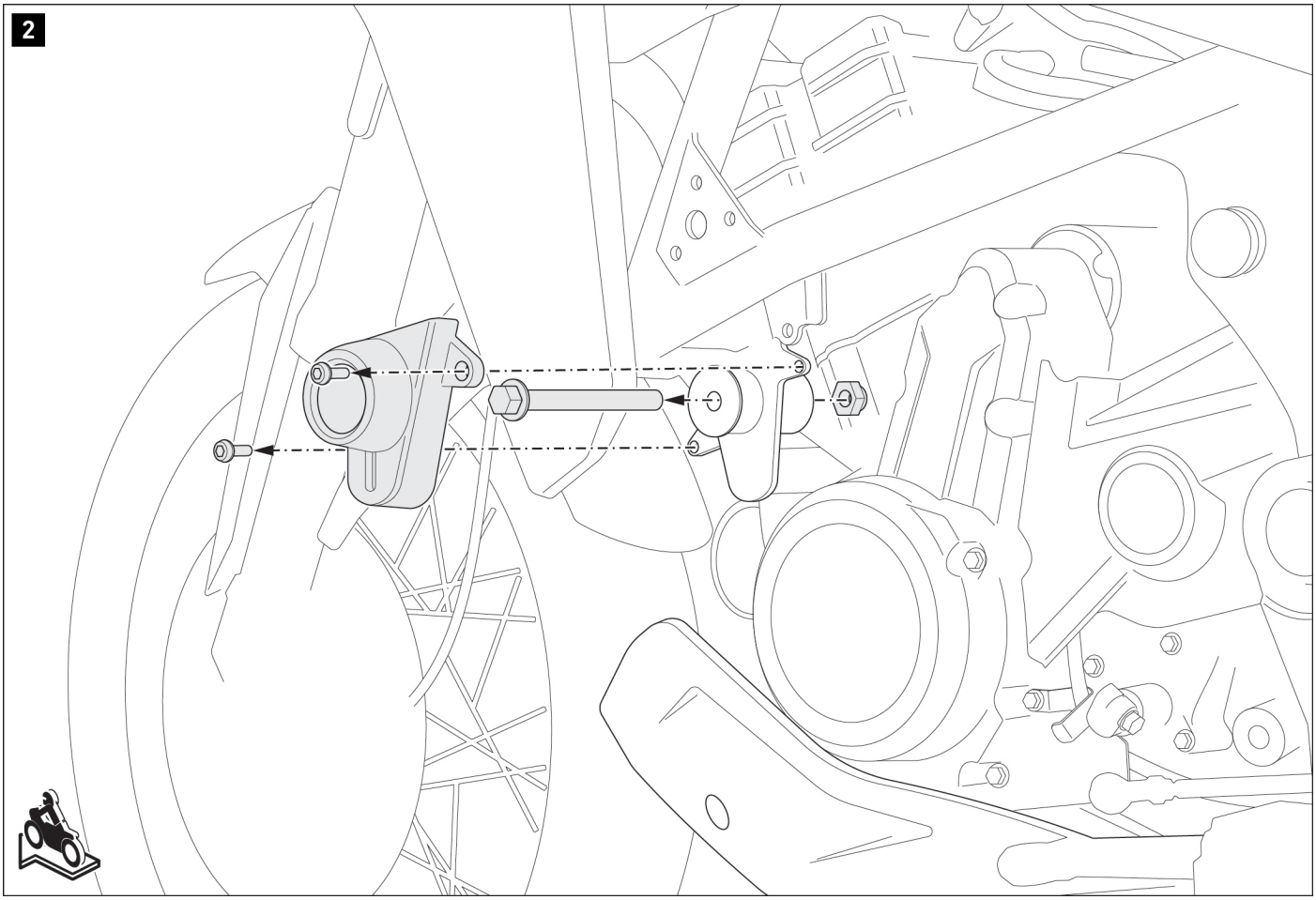

Loosen the screws and remove the fairing shown from the **left-hand** side of the vehicle.

The content translation is automated.
© SW-MOTECH GmbH & Co. KG

Errors and omissions excepted
Subject to technical and design changes.

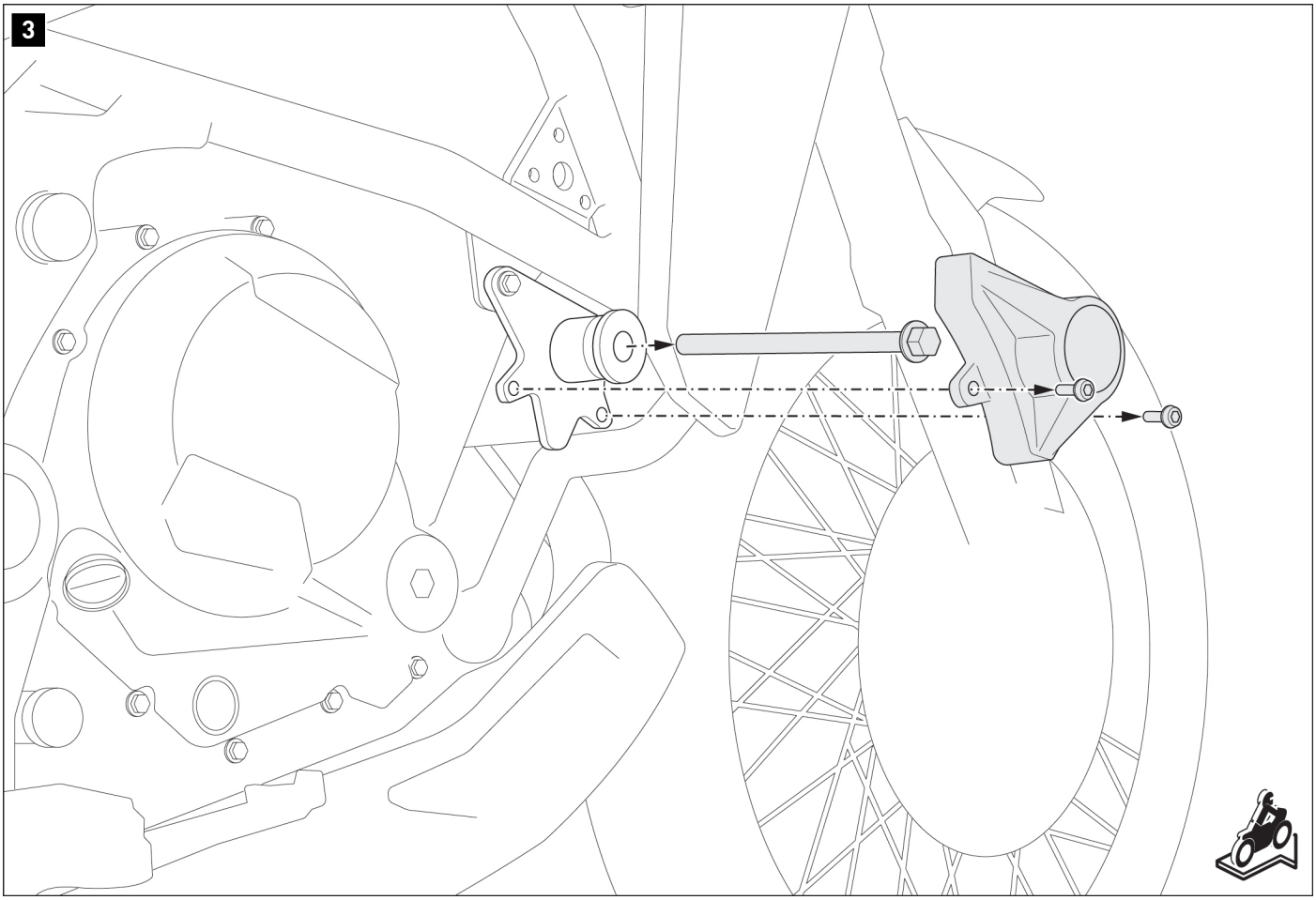

Loosen the screws and remove the fairing shown from the **right-hand** side of the vehicle.

The content translation is automated.
© SW-MOTECH GmbH & Co. KG

Errors and omissions excepted
Subject to technical and design changes.

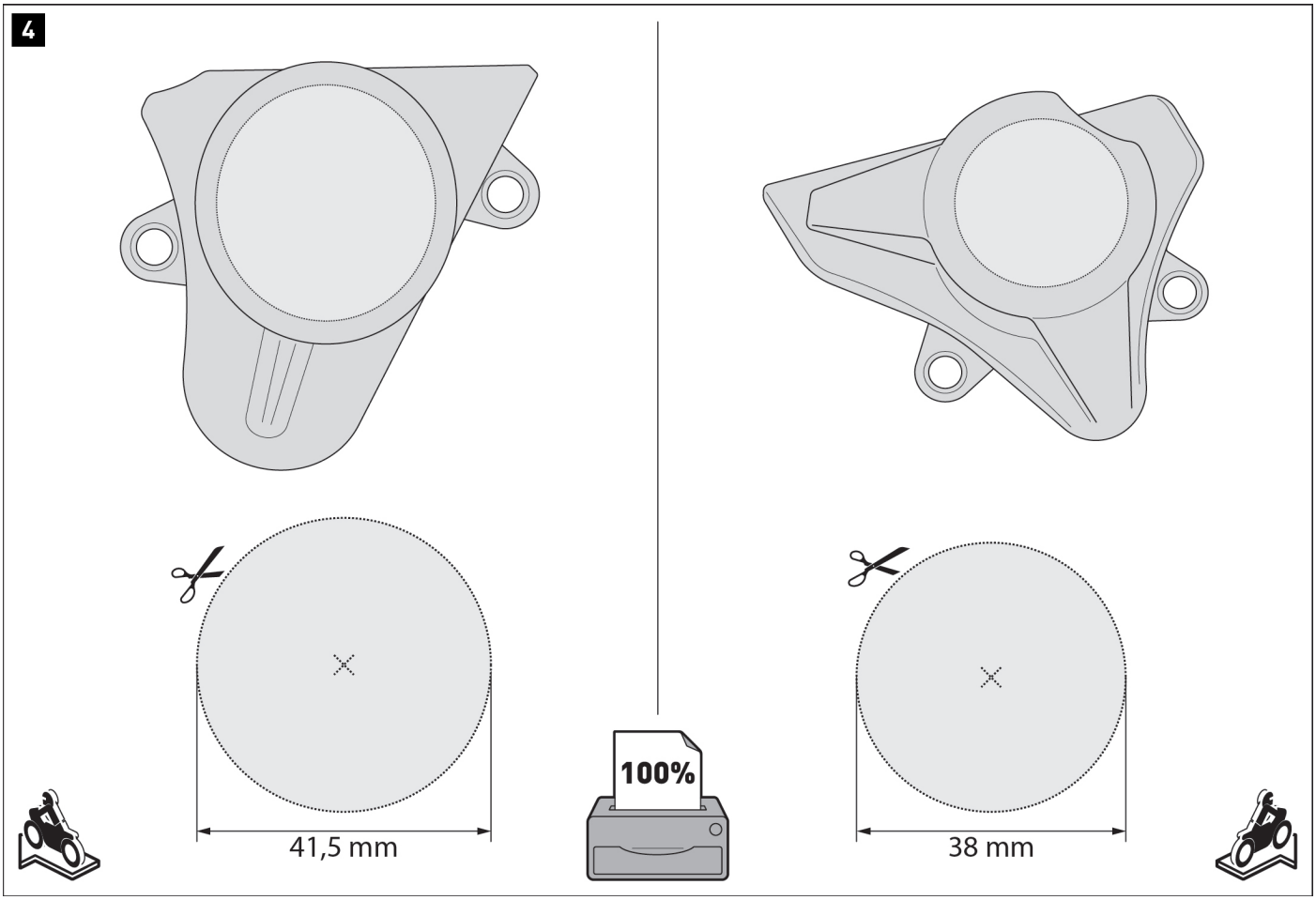

⚠ WARNING: Risk of injury!

Print out the page with the templates. Make sure the scaling is set **to 100% in your printer settings** .
⚠ ***NOTE:*** *After printing, check the dimensions of the stencils to ensure they are correct!*

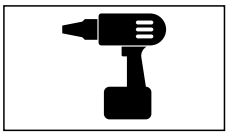

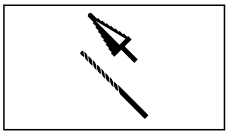

Carefully cut out the side-specific templates.
Attach the templates to the inside of the dismantled plastic fairings with adhesive tape.

Using a suitable 6 mm drill, make a pilot hole in the marked center of the templates.
Drill the fairings according to the respective template dimensions.
Trim the edges of the cut-outs.

Now reassemble the fairing parts and coolant reservoir and mount them onto the vehicle.
Tighten the screws according to the manufacturer's instructions.

The content translation is automated.
© SW-MOTECH GmbH & Co. KG

Errors and omissions excepted
Subject to technical and design changes.

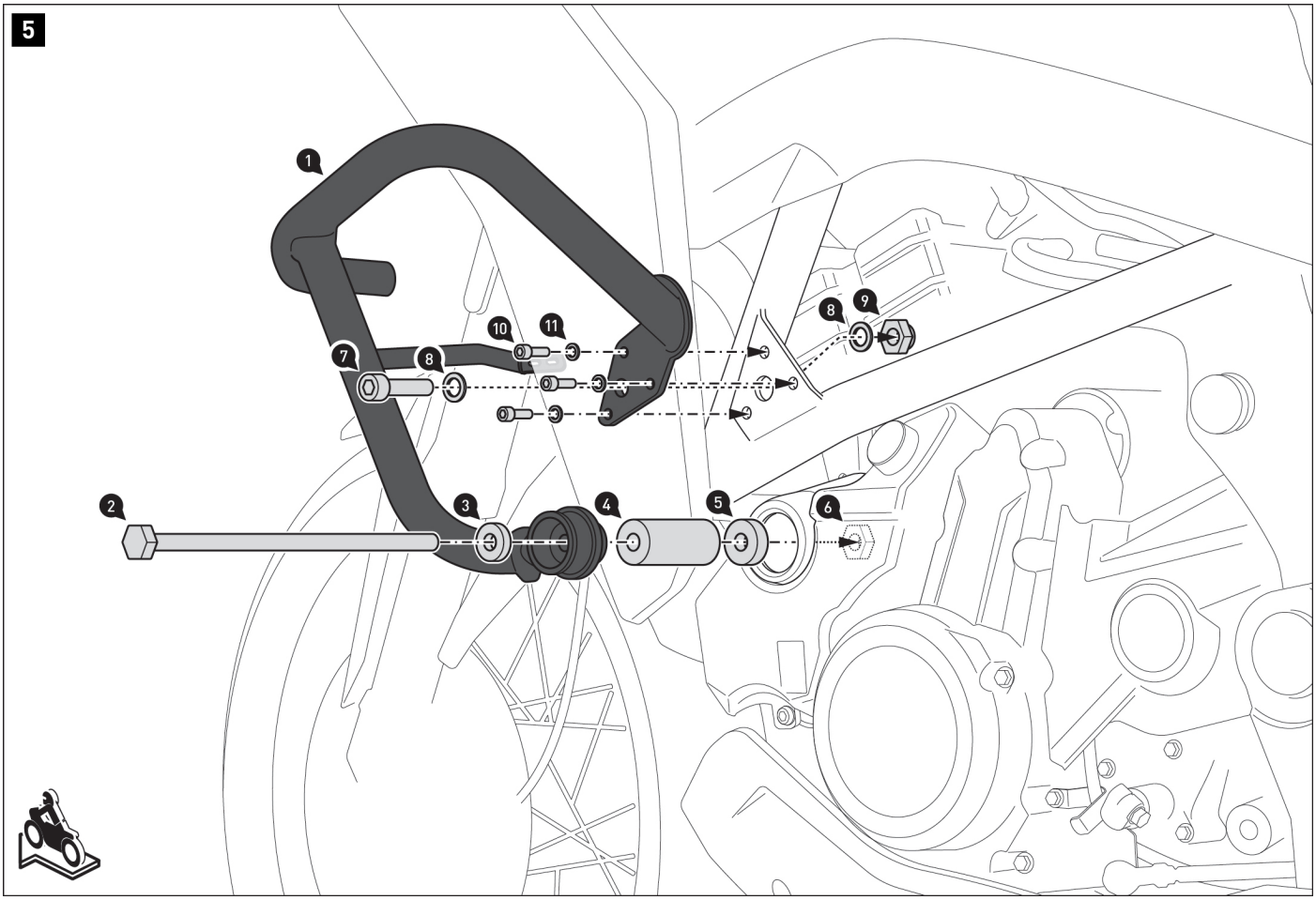

Screw the **left-hand** crash bar (1) to the vehicle.
⚠ **WARNING: Use liquid thread locker for screws (2) and (10)!**
Do not tighten the screws yet.

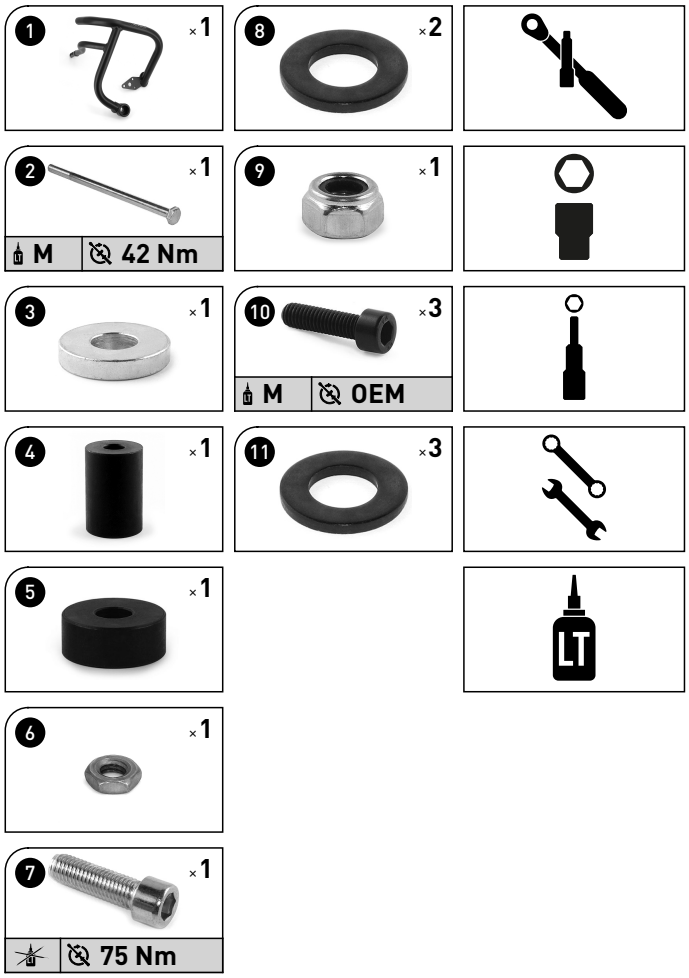

The content translation is automated.
© SW-MOTECH GmbH & Co. KG

Errors and omissions excepted
Subject to technical and design changes.

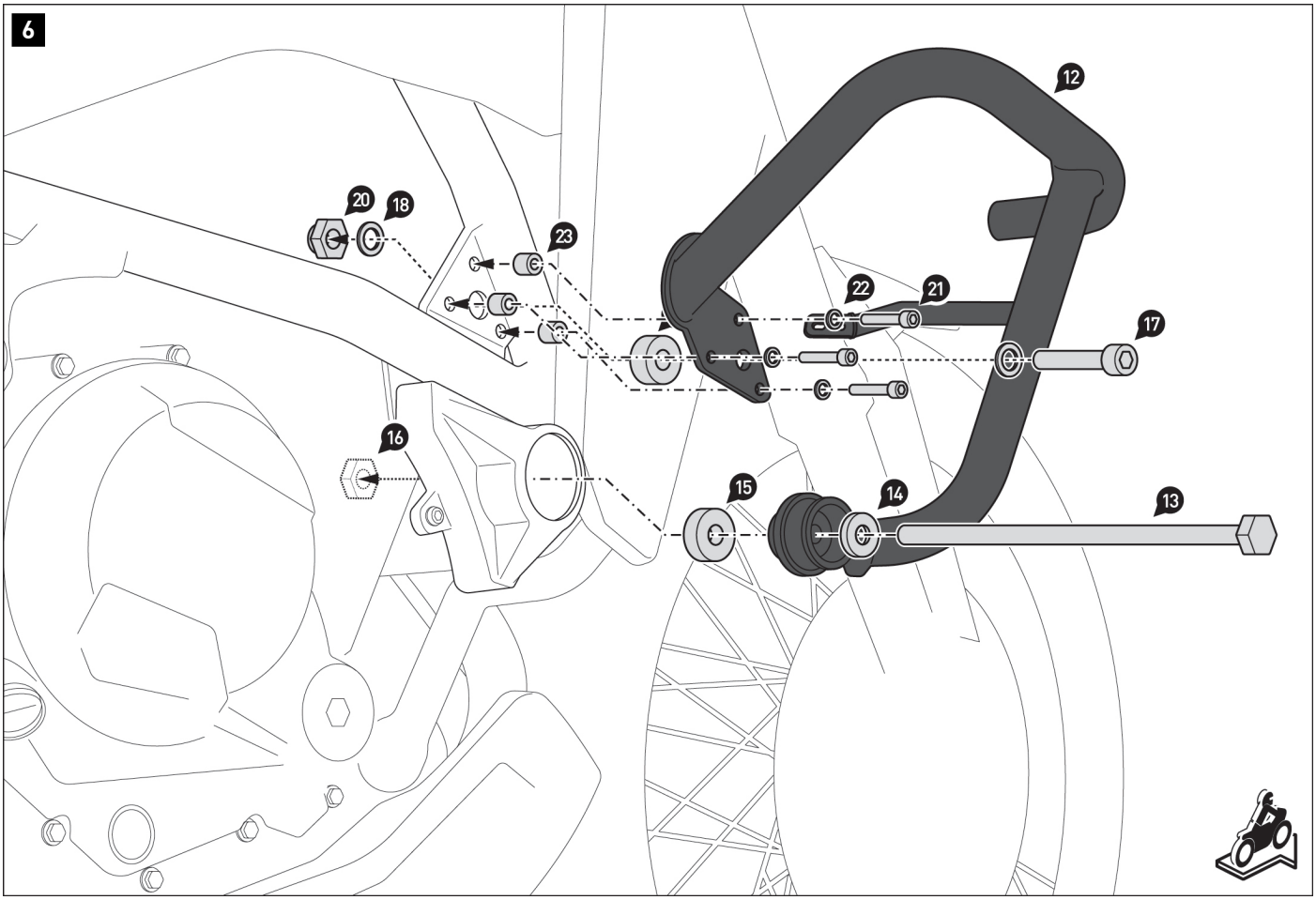

Screw the **right-hand** crash bar (12) to the vehicle.
⚠ **WARNING: Use liquid thread locker for screws (13) and (21)!**
Do not tighten the screws yet.

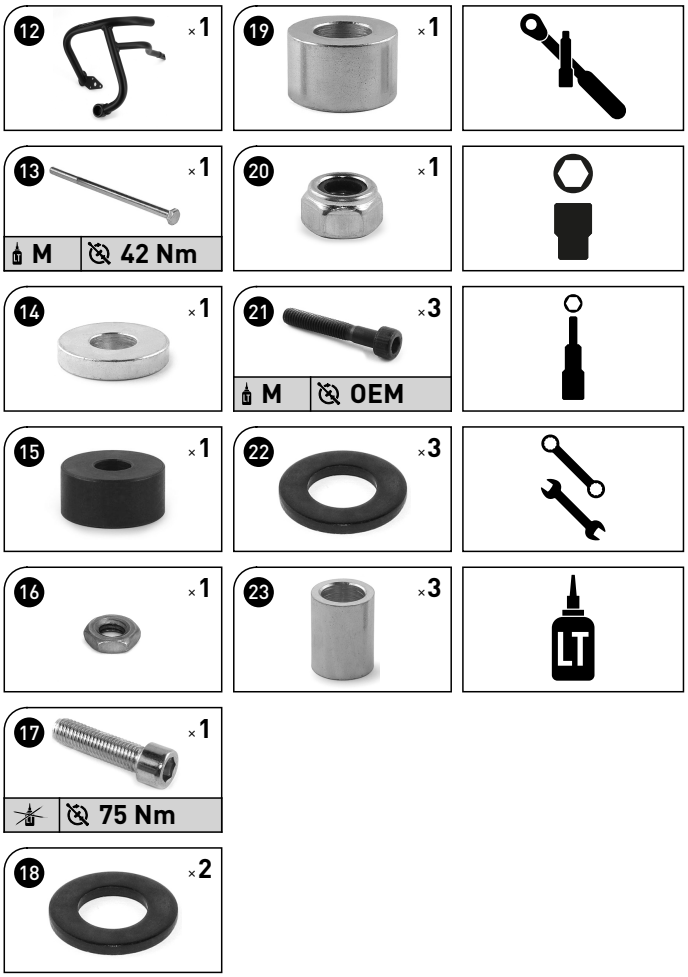

The content translation is automated.
© SW-MOTECH GmbH & Co. KG

Errors and omissions excepted
Subject to technical and design changes.

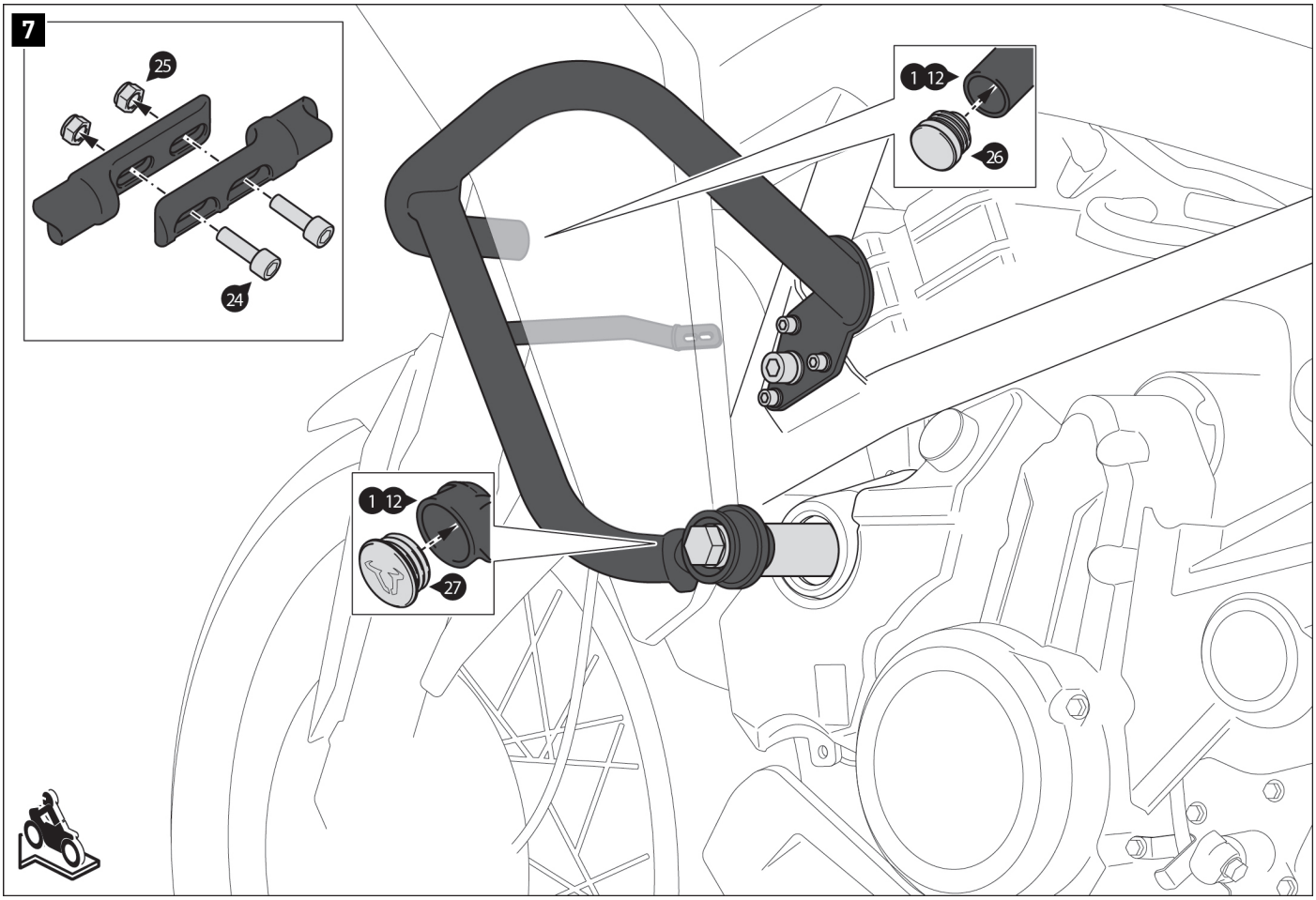

Screw the crash bars (1) and (12) together along the upper connectors as shown in the detailed drawing.

When all components have been loosely attached, tighten the screws (10), (13) and (21) according to the manufacturer's instructions!
Tighten the remaining screws as specified in the mounting instructions!

Finally, insert the plastic plugs (26) and end caps (27) into the openings on the crash bars **on both sides**.

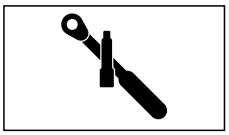

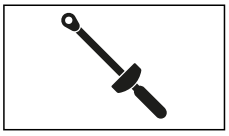

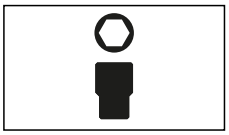

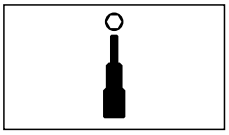

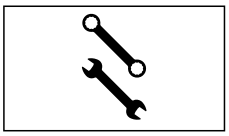

The content translation is automated.
© SW-MOTECH GmbH & Co. KG

Errors and omissions excepted
Subject to technical and design changes.

PRODUCT-SPECIFIC NOTES

⚠ WARNING: This product may inhibit cornering and ground clearance in cases of extreme inclination!
⚠ ***NOTE:*** *Please observe the country-specific regulations for the registration/operation of your vehicle or any applicable TÜV regulations. After installation, parts subject to registration should be entered in the vehicle documents by your test center.*

© SW-MOTECH GmbH & Co. KG

Errors and omissions excepted
Subject to technical and design changes.