SHAD TERRA

ENGINEERED FOR RIDING

GERMAN DESIGN AWARD WINNER 2025

TR50

X35 **Y**57 **Z**31'5 (cm)

X0TR502

USER GUIDE REAR BAG

WWW.SHAD.ES

CARE AND MAINTENANCE

WARNING!

MAXIMUM WEIGHT

MAXIMUM SPEED, CHECK LOCAL LAWS.

ALWAYS SECURE AND LOCK PRODUCTS.

ONLY USE RECOMMENDED CLEANING PRODUCTS.

BAGS ARE NOT DESIGNED TO PROTECT FRAGILE OBJECTS.

40L Capacity

Reflective

Before mounting, carefully read through the instructions start to finish. Failure to follow recommended mounting and installation instructions voids warranty. Manufacturer is not liable for any damage, injury or death that results from improper use and installation of products. By installing these products, user accepts all liabilities.

Knobs, bolts, screws, straps and locks must be periodically inspected for signs of wear, corrosion, and fatigue. Never drive with any lock, knob or rack in an open or unlocked position.

Shad locks are designed to deter vandalism and theft but should not be considered theft proof. Remove valuable gear if your vehicle is unattended for an extended period.

Check country specific laws regarding transportation systems and projection of objects beyond the perimeter of a vehicle. Be aware of the width and height of your cargo. All cargo will affect the vehicle's driving behavior.

For safety to your vehicle and luggage system, obey all posted speed limits and traffic cautions. Adapt your speed to the conditions of the road and the load being carried.

Consult with your Shad dealer if you have any questions regarding the operations and limits of Shad Products.

Do not use Shad carriers and accessories for purposes other than those for which they were designed.

Do not exceed their carrying capacity. Failure to follow these guidelines or the product's instructions will void the warranty.

Prolonged exposure to the elements might discolor fabrics and wear away plastic components.

Make sure that loads are evenly distributed inside the cargo box or bag.

Waterproof zippers and rain covers do not guarantee that the bag is totally waterproof.

INNER REINFORCEMENT INSTALLATION

1

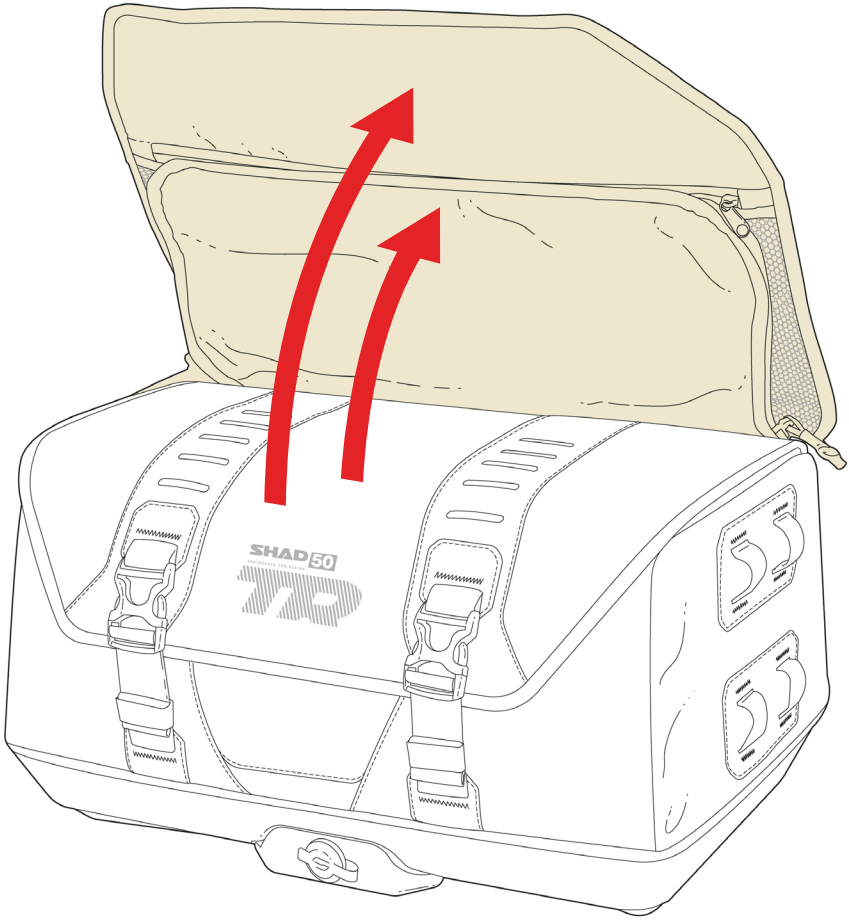

2

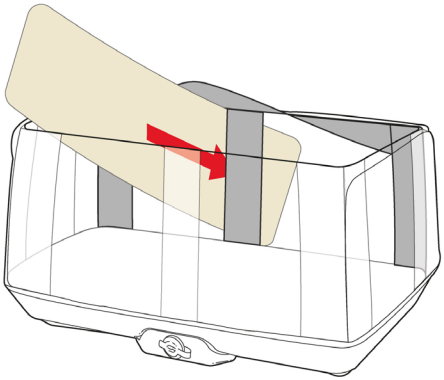

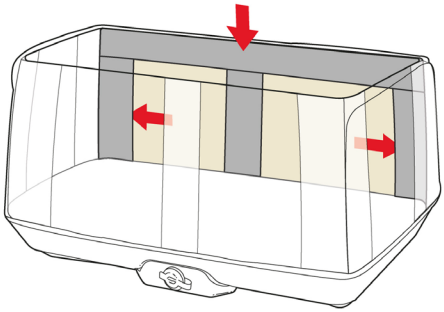

3

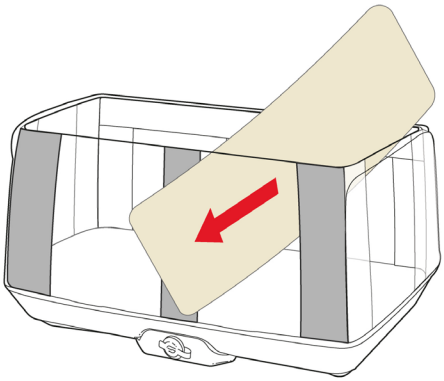

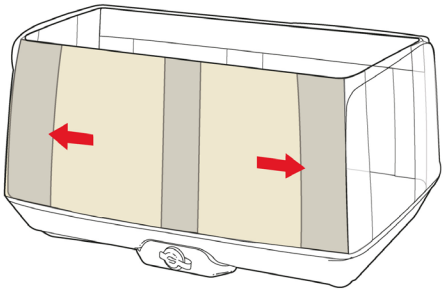

4

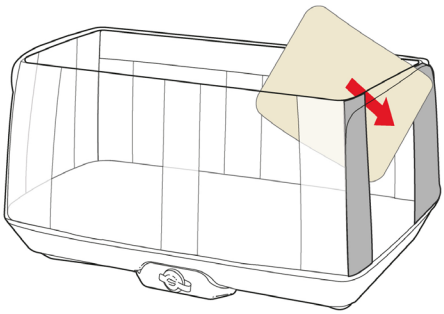

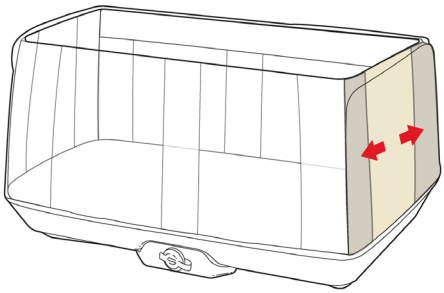

5

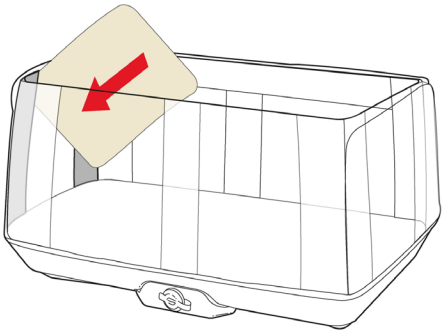

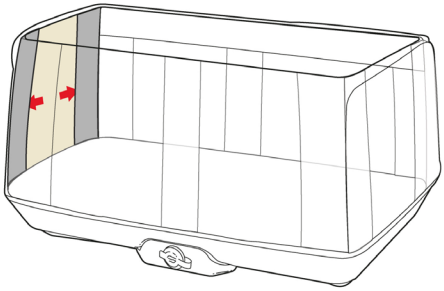

ASSEMBLY

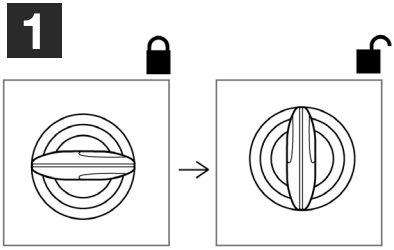

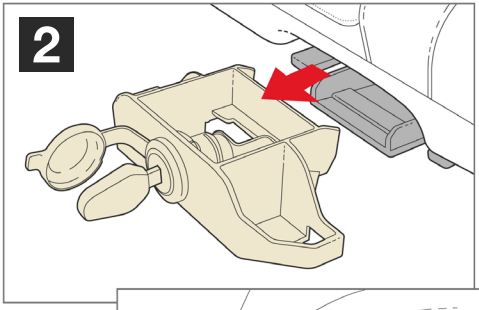

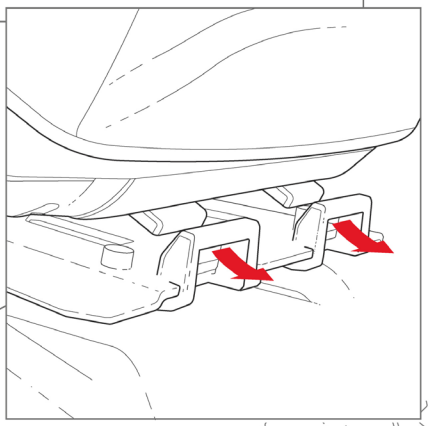

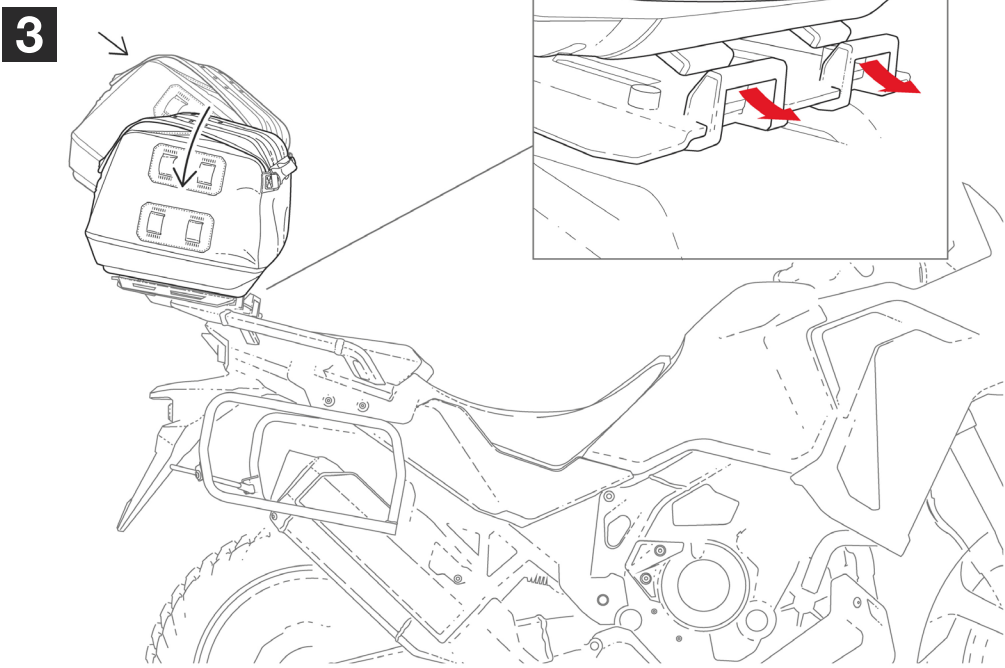

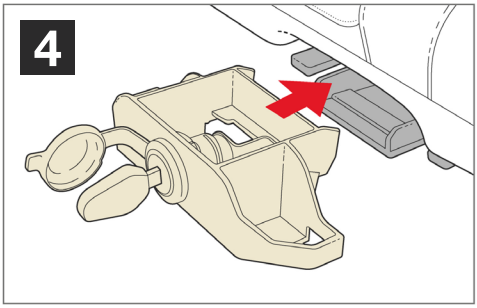

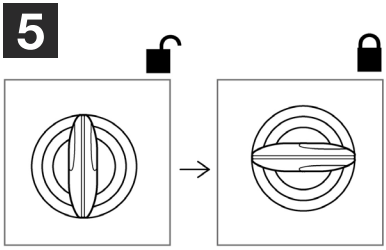

RELEASE

1

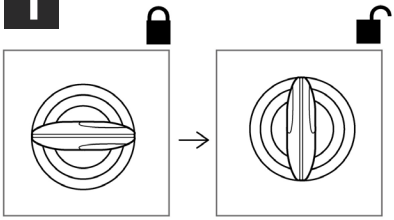

2

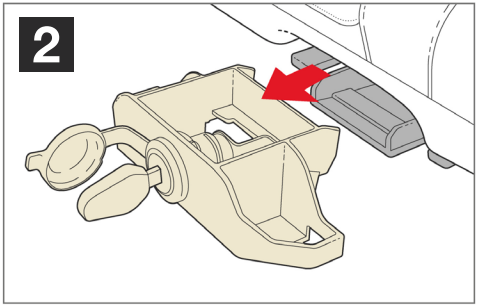

3

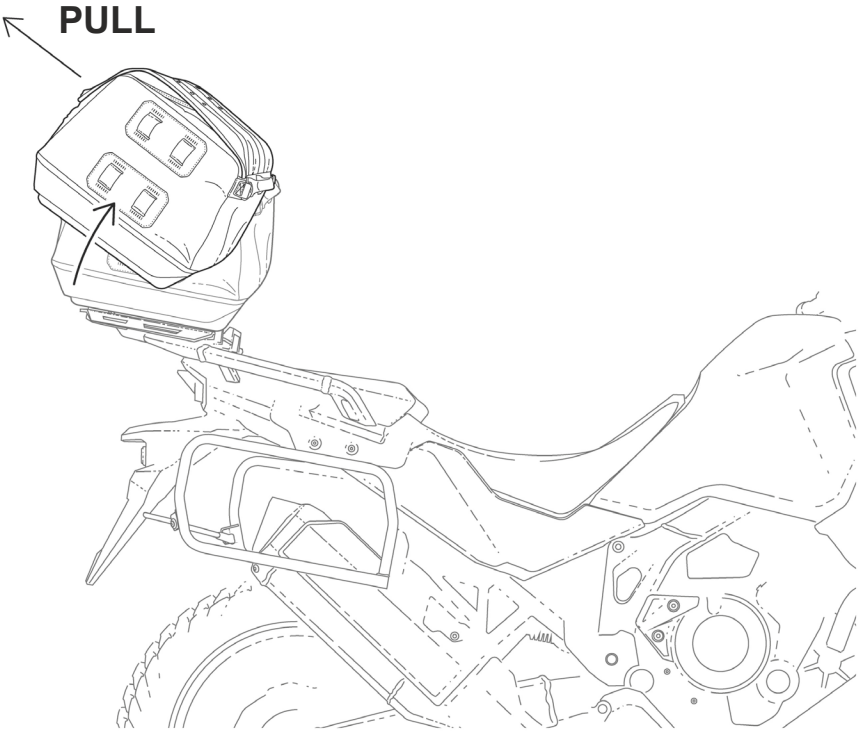

4

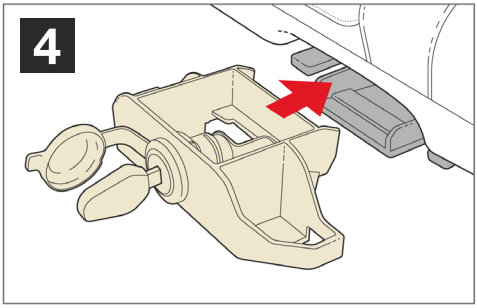

5

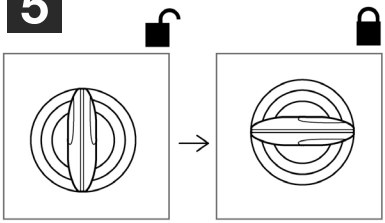

ACCESSORIES

OPTIONAL DRY BAG + BAG HOLDER

X1TR03

OPTIONAL BOTTLE HARNESS

X1TR05

TR08. WATERPROOF CRASH BAR BAG

X0TR08

SOLD SEPARATELY

ALUMINIUM PLATE

D1BTRPA

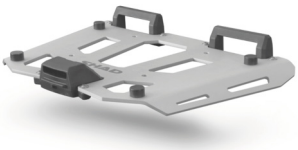

SOLD SEPARATELY

ALUMINIUM PLATE

D1BTRPA2

SOLD SEPARATELY

BIG PLATE

D1B591PA

DESIGNED IN BARCELONA

Since 1973

SHAD EUROPE NAD S.L.

HEADQUARTERS

T: (+34) 935 795 866
Octave Lecante, 2-6
Mollet del Valles, 08100
Barcelona - Spain

SHAD CHINA

T: (+86) 21 6236 5730
Room 501 (Zone 1-T3),
No.1, Lane 268, Tai Hong Road,
MinHang District, 201107
Shanghai - China

SHAD USA

T: (+1) 305 652 6366
19096 NE 4th Court
Miami FL, 33179
USA

SHAD INDONESIA

T: (+62) 21 2271 8560
Jl. Kemang Selatan VIII No.56 Unit B
Jakarta 12730 Indonesia

WWW.SHAD.ES

SHAD

ENGINEERED FOR RIDING

WE ARE DOING **GREEN**

DESIGNED TO LAST

TIMELESS. DURABLE. REPAIRABLE.
WITH PARTS & SUPPORT TO EXTEND PRODUCT LIFE.

WWW.SHAD.ES