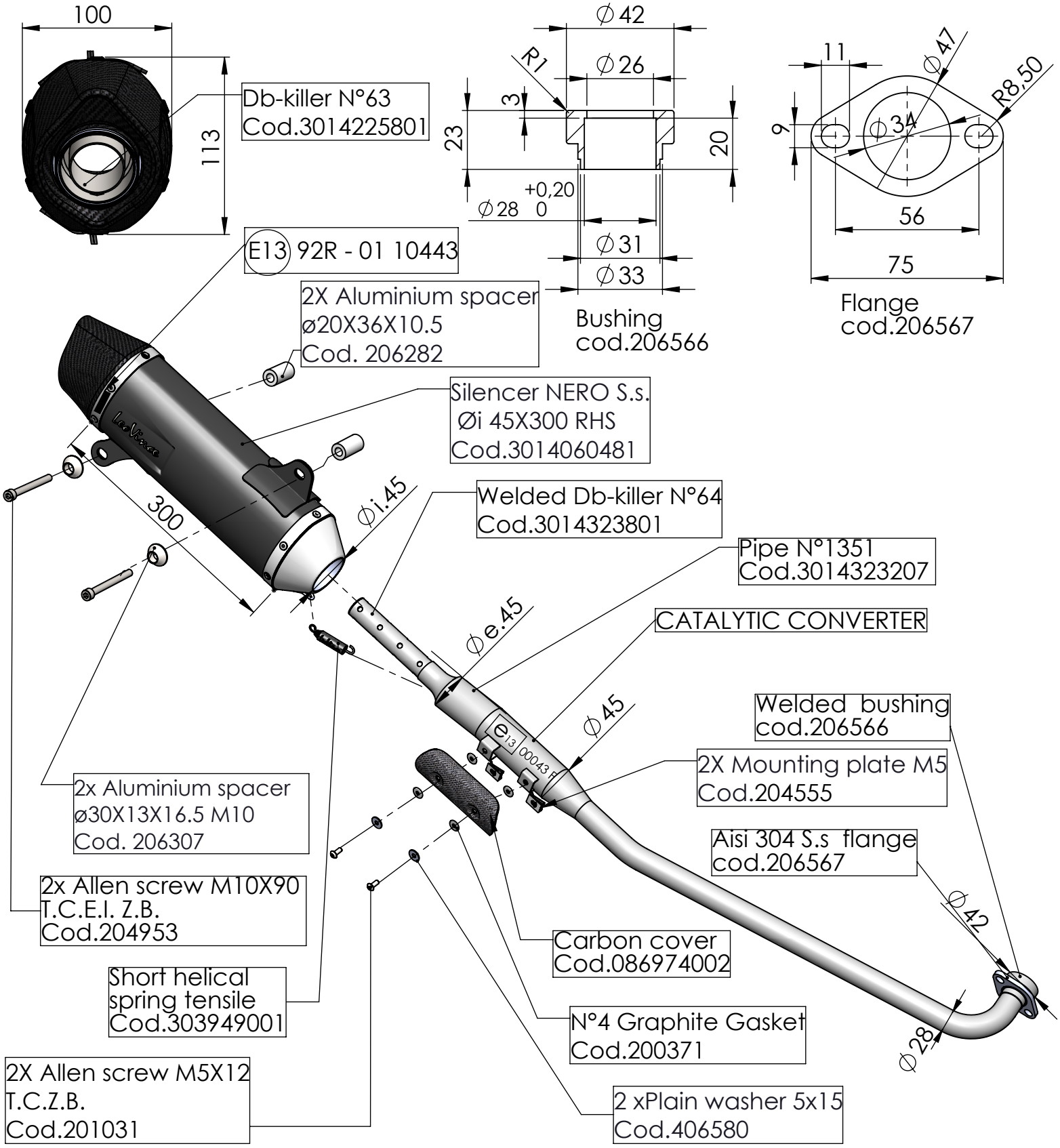

WARNING

it is advisable to optimize the carburation by remapping the stock ECU or by adopting an additional ECU unit.

ART. 14060K

YAMAHA 125 X-MAX / IRON MAX

FULL SYSTEM - NERO - STAINLESS STEEL - APPROVED