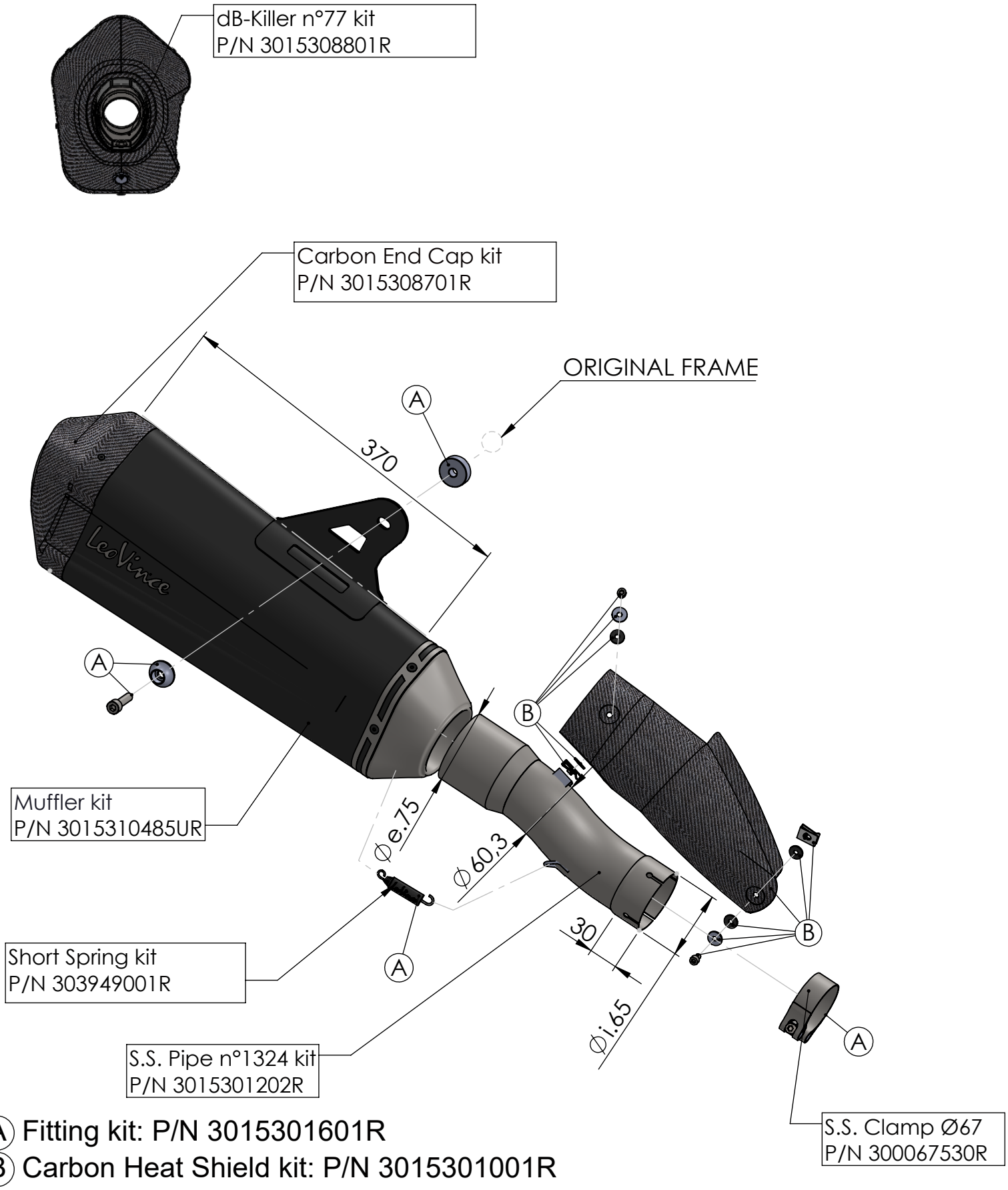

(A) Fitting kit: P/N 3015301601R
(B) Carbon Heat Shield kit: P/N 3015301001R

ART. 15310BU - SPARE PARTS

BMW R 1200 GS / ADVENTURE - R 1250 GS / ADVENTURE
(Fits with original panniers)

SLIP-ON LV-12 R BLACK EDITION